lunar energy



Lunar Battery Installation Manual

Inverter & Battery Block

Revision History

Revision	Description of Change	Effective Date
1	Initial Release	12/26/2023
2	Compliance Updates	05/01/2024
3	Updated Regulatory Statements	05/31/2024
4	Format, Inverter Cover, and Antenna Update	12/17/2024
5	Power Control Systems, and Rogowski Coils	01/31/2025
6	15 kWh Configurations, Updated Battery Block Part Numbers, Placard and Directory Requirements, and Battery System Clearances	04/10/2025
7	Updated PCS Section	08/14/2025
8	Updated PCS Section for MSA & MSAC	09/05/2025

Revision History 2
Legal Information 6
A. Contact 6
B. Legal Statement 6
C. Documentation 6
D. Specifications 6
E. Copyright 6
F. Trademarks 7
G. Electronics and Battery Disposal 7
H. Warranty Information 7
Important Safety Instructions 8
A. Intended Use 8
B. Safety and Advisory Symbols 9
C. Documentation 10
D. Service Contact Information 10
E. Safety Rules and General Information 10
F. Storage, Installation, and Use 13
G. Environmental Conditions 16
H. Warning Symbols 17
I. Qualified Personnel 18
Regulatory Statements 19
A. Compliance Summary 19
B. Compliance Statements 19
Lunar System Specifications 22
Inverter Block 15 kWh | 20 kWh 22
Battery Block 23
System 15 kWh | 20 kWh 23
Environmental 24
Mechanical 15 kWh | 20 kWh 25
Operational Specifications 25
Component Overview 26
System Overview 27
A. System Diagrams 27
B. Battery System Configurations 29

C. Solar System Configurations..... 31
D. Battery to Lunar Maximizer & Maximizer Hub Communication.....31
E. Microgrid Interconnect Device (MID).....31
F. Battery to Lunar Bridge Connections..... 31
G. Lunar Battery Communication.....32
Site Requirements.....33
A. Location.....33
B. System Clearances.....34
C. Maximum Distance between System Components.....36
D. Cooling & Ventilation.....36
E. Operating Temperature Range.....37
F. Placard & Directory Requirements.....38
Tools & Materials.....39
A. Required Tools..... 39
B. Required Materials..... 39
Installation Preparation..... 40
A. Unboxing..... 40
B. Open the Box and Inspect the Battery..... 41
Mounting the Battery Brackets.....42
Anchoring Details..... 43
A. Wall-mounted Battery system.....45
B. Floor-mounted Battery System..... 51
Installing the Battery Blocks.....53
Install the Inverter.....59
Wire the Inverter.....60
A. Open the Inverter wiring compartment cover..... 60
B. Install Conduit.....61
C. Power Wiring..... 63
D. Optional: Temporarily Removing the AC Filter Module..... 64
E. Communication Wiring..... 65
F. Optional: Rapid Shutdown Initiation Device (RSID)..... 65
G. Inverter Wiring Cover.....67
Connecting the Trunk Harness..... 68
Connecting the Trunk Harness to the Inverter.....68
Connecting the Trunk Harness to the Battery Blocks..... 71
Install the Inverter EMC Components..... 74
A. Apply conductive tape to AC & DC Conduit Connectors.....74

B. Inverter Door Magnet Strap....75
Install the Aesthetic Covers....76
Connect the Antenna & LED....80
Install the Bug Barriers on the Conduit....81
Conduit Cover....83
Commission the Lunar System....84
Troubleshooting....85
LED Indicators....85
Appendixes....86
Rogowski Coil (CTs)....86
A. Compatible Coils....86
B. Installation....86
Coils Installation at Main Panel....86
Coil Installation on Branch Circuits....86
Coil Termination at the Bridge....87
C. Coil Phase & Polarity....87
Adjusting Coil Phase & Polarity....87
Coil Indicator Arrow and Wire Termination....88
D. Commissioning....88
Power Control Systems (PCS)....89
Terminology....93
Commissioning....93
Labels....94
Grid Interconnection Settings for the Lunar Inverter....102
Enter Service Defaults....102
High Voltage Shall Trip Curve....103
Points....103
Low Voltage Shall Trip Curve....103
Points....103
High Frequency Shall Trip Curve....104
Points....104
Low Frequency Shall Trip Curve....104
Points....104
Volt Var Curve....105
Points....105
Frequency Droop....105
Volt Watt Curve....106

Points..... 106

Legal Information

A. Contact

Lunar Energy, Inc.
755 Ravendale Drive
Mountain View, CA 94043
USA
www.lunarenergy.com
Attention: legal@lunarenergy.com

B. Legal Statement

For complete legal information, including copyrights, trademarks, licensing, terms of use, warranties, and customer privacy policy, visit www.lunarenergy.com.

C. Documentation

Lunar Energy makes no representation or warranty, express or implied, with respect to this documentation or any of the equipment or software it may describe, including any implied warranties of utility, merchantability, or fitness for any particular purpose. Neither Lunar Energy nor its distributors or dealers shall be liable for any indirect, incidental, or consequential damages under any circumstances.

All information contained in this document is accurate at the time of publication. Lunar Energy reserves the right to make technical corrections and updates at any time without advance notice. The images in this document are provided for demonstration purposes only. For the latest installation and user documentation, visit www.lunarenergy.com.

D. Specifications

All specifications contained in this document are accurate at the time of publication. Lunar Energy reserves the right to make product modifications at any time without advance notice. For the latest product information, visit www.lunarenergy.com.

E. Copyright

©2023 Lunar Energy, Inc. All rights reserved.

All information in this document is subject to copyright and other intellectual property rights of Lunar Energy, Inc. This material may not be modified, reproduced or copied, stored in a retrieval system, or transmitted, in whole or in part, without the prior written permission of Lunar Energy.

F. Trademarks

lunar energy	Lunar Energy Lunar Battery Lunar Bridge Lunar Maximizer Lunar Maximizer Hub

All other trademarks in this document are the property of their respective owners. The unauthorized use of any trademark displayed in this document or on the product is strictly prohibited.

G. Electronics and Battery Disposal

Waste electrical products should not be disposed of with household waste. Proper disposal of electronic equipment is required. Refer to local codes for disposal requirements.

Contact Lunar Energy for further guidance to identify how to properly decommission, dispose, recycle, and/or return hardware to Lunar Energy.

H. Warranty Information

The warranty for Lunar products depends on a reliable internet connection, which allows the system to receive regular over-the-air firmware updates. If a Lunar product is disconnected from the internet for an extended period, its warranty may be limited to five years. Refer to https://www.lunarenergy.com/documents for more information.

Important Safety Instructions

SAVE THESE INSTRUCTIONS

This installation document provides instructions for storing, transporting, installing, commissioning and decommissioning the Lunar Battery. These instructions are for qualified installers and service technicians only.

Follow these instructions during installation, maintenance, and operation of the equipment. This section contains safety information that must be observed at all times when working on or using the equipment.

ATTENTION

Please read this entire document before installing the equipment. Ignoring the warnings or instructions within may lead to electric shock, serious injury, loss of life, or damage to the equipment, potentially causing it to become inoperable.

Lunar Energy assumes no liability for injury or property damage due to installation or service attempted by unqualified individuals, or due to a failure of installers or service technicians to properly follow safety, installation and service instructions.

A. Intended Use

The product is a battery system with integrated hybrid inverter for a solar photovoltaic and battery storage system. It is used in the Lunar Energy Storage System along with a microgrid interconnect device and accessory components for module-level power electronics and communication. The system is intended for residential use.

The system is intended for use in standard 120/240-volt split-phase, 3-wire electrical distribution systems in North America.

The product is suitable for indoor and outdoor use, according to the requirements outlined in this Installation Manual.

The product must be operated with third-party accessory components approved by the electrical standards applicable in the jurisdiction of installation.

B. Safety and Advisory Symbols

The following symbols are used in this document to indicate important information:

	**WARNING**: Indicates a hazardous situation where failure to follow instructions or use proper materials may result in **serious injury, loss of life, or destruction of equipment**. Use caution and do not proceed until the indicated conditions or required procedures are fully understood and met.
	**CAUTION**: Indicates a hazardous situation where failure to follow instructions or use proper materials may result in **minor injury or damage to equipment**. Do not proceed until the indicated conditions or required procedures are fully understood and met.
	**NOTE:** Indicates an important step or additional information that highlights best practices or procedures. To avoid damage to equipment and achieve optimum results, follow the instructions carefully.

Les symboles suivants sont utilisés dans ce document pour indiquer des informations importantes:

	**AVERTISSEMENT:** Indique une situation dangereuse dans laquelle le non-respect des instructions ou l'utilisation de matériaux inappropriés peut entraîner **des blessures graves, la mort ou la destruction de l'équipement**. Soyez prudent et ne continuez pas tant que les conditions indiquées ou les procédures requises ne sont pas entièrement comprises et respectées.
	**ATTENTION**: Indique une situation dangereuse dans laquelle le non-respect des instructions ou l'utilisation de matériaux inappropriés peut entraîner **des blessures légères ou des dommages matériels**. Ne continuez pas tant que les conditions indiquées ou les procédures requises ne sont pas entièrement comprises et respectées.
	**NOTE:** Indique une étape importante ou des informations supplémentaires qui **mettent en évidence les meilleures pratiques ou procédures**. Pour éviter d'endommager l'équipement et obtenir des résultats optimaux, suivez attentivement les instructions.

C. Documentation

⚠ **WARNING:** Follow all safety precautions in the owner's manual, installation manual, and other documents included with the equipment.
⚠ **WARNING**: Read all instructions and cautionary markings in this document and on the equipment before installing the equipment. Failure to follow any of the instructions or warnings in this document may result in electric shock, serious injury, or loss of life.
⚠ **AVERTISSEMENT**: Suivez toutes les précautions de sécurité contenues dans le manuel du propriétaire, le manuel d'installation et les autres documents fournis avec l'équipement.
⚠ **AVERTISSEMENT**: Lisez toutes les instructions et mises en garde contenues dans ce document et sur l'équipement avant installation. Le non-respect des instructions ou des avertissements de ce document peut entraîner un choc électrique, des blessures graves, voire la mort.

D. Service Contact Information

For assistance with installation, service, or repairs, you can reach Lunar Energy Installer Support between 8 AM and 7 PM (PST) through the following methods:

- Telephone: 650-535-1969
- Email: installersupport@lunarenergy.com
- Lunar Installation App (live-chat, phone or email)

When reaching out to Lunar Energy Installer Support for service or parts inquiries, please have the product model and serial number, readily available.

E. Safety Rules and General Information

All installations must conform to the laws, regulations, codes and standards applicable in the jurisdiction of installation. Before starting an installation, consult a local building or electrical inspector for local codes, permit and inspection requirements.

Jurisdiction	Code
United States	National Electrical Code (ANSI/NFPA 70)
Canada	Canadian Electrical Code (CSA Z462, CSA C22.1, Part 1)

⚠ **WARNING**: Only qualified electrical personnel should install, troubleshoot, service, or replace the equipment.

⚠ **WARNING**: Apply appropriate personal protective equipment (PPE) and follow safe electrical work practices.

⚠ **WARNING**: Turn off all power supplying this equipment before working on or inside the equipment. Always use a properly-rated voltage sensing device to confirm power is off. Replace all devices, covers, and doors before turning on power to the equipment.

⚠ **WARNING**: To protect the equipment and its components from damage when transporting, handle with care. To help prevent damage, leave all equipment in its shipping packaging until it is ready to be installed.

⚠ **WARNING**: Inspect the equipment for damage before installing. Do not install the equipment if it has been damaged in any way.

⚠ **WARNING**: Do not attempt to open, disassemble, repair, tamper with, or modify the equipment. The equipment contains no user-serviceable or field-replaceable parts. Contact the installer who installed the equipment for any repairs.

⚠ **WARNING**: Do not insert foreign objects into any part of the equipment.

⚠ **WARNING**: Do not expose the equipment or any of its components to direct flame.

⚠ **WARNING**: This product is not intended to be used in a critical life support application. Failure to adhere to this warning could result in loss of life or serious injury.

⚠ **WARNING**: Prop 65 Warning for California Residents: This product may contain chemicals known to the State of California to cause cancer, birth defects, and other reproductive harm.

⚠ **CAUTION**: Do not use parts or accessories other than those specified for use with the equipment.

⚠ **CAUTION**: Do not paint any part of the equipment, including any internal or external components or covers.

⚠ **CAUTION**: Do not use solvents to clean the equipment, or expose the equipment to flammable or harsh chemicals or vapors. Do not allow petroleum-based paints, solvents, or sprays to contact nonmetallic parts of the equipment.

⚠ **AVERTISSEMENT**: Seul un électricien qualifié doit installer, dépanner, entretenir ou remplacer l'équipement.

⚠ **AVERTISSEMENT**: Appliquez les équipements de protection individuelle (EPI) appropriés et suivez les procédures de sécurité électrique.

⚠ **AVERTISSEMENT**: Coupez toute alimentation électrique alimentant cet équipement avant de travailler sur ou à l'intérieur de l'équipement. Utilisez toujours un dispositif de détection de tension correctement calibré pour confirmer que l'alimentation est coupée. Remplacez tous les appareils, capots et portes avant de mettre l'équipement sous tension.

⚠ **AVERTISSEMENT**: Pour protéger l'équipement et ses composants contre les dommages liés au transport, manipulez avec précaution. Pour éviter tout dommage, laissez l'équipement dans son emballage d'origine jusqu'à ce qu'il soit prêt à être installé.

⚠ **AVERTISSEMENT**: Inspectez l'équipement pour déceler tout dommage avant installation. N'installez pas l'équipement s'il a été endommagé de quelque manière que ce soit.

⚠ **AVERTISSEMENT**: N'essayez pas d'ouvrir, de démonter, de réparer, de falsifier ou de modifier l'équipement. L'équipement ne contient aucune pièce réparable par l'utilisateur. Contactez l'installateur qui a installé l'équipement pour toute réparation.

⚠ **AVERTISSEMENT**: N'insérez aucun objet étranger dans l'équipement.

⚠ **AVERTISSEMENT**: N'exposez pas l'équipement ou l'un de ses composants à une source de chaleur directe.

⚠ **AVERTISSEMENT**: Ce produit n'est pas destiné à être utilisé dans une application critique de survie. Le non-respect de cet avertissement pourrait entraîner la mort ou des blessures graves.

⚠ **AVERTISSEMENT**: Avertissement Prop 65 pour les résidents de Californie : ce produit peut contenir des produits chimiques connus par l'État de Californie pour provoquer le cancer, des malformations congénitales et d'autres problèmes de reproduction.

⚠ **ATTENTION**: Ne pas utiliser de pièces ou accessoires autres que ceux spécifiés pour être utilisés avec l'équipement.

⚠ **ATTENTION**: Ne peignez aucune partie de l'équipement, y compris les composants ou couvercles internes ou externes.

⚠ **ATTENTION**: N'utilisez pas de solvants pour nettoyer l'équipement et n'exposez pas l'équipement à des produits chimiques ou des vapeurs inflammables ou agressifs. Ne laissez pas les peintures, solvants ou sprays à base de pétrole entrer en contact avec les parties non métalliques de l'équipement.

F. Storage, Installation, and Use

⚠ **WARNING**: Do not store the equipment for more than six (6) months, or permit the electrical feed to the equipment to be disconnected for more than six (6) months, without placing the equipment into a storage condition as approved by Lunar Energy.

⚠ **WARNING**: These service instructions are for use by qualified personnel only. To reduce the risk of electric shock, do not perform any servicing other than that specified in the operating instructions unless you are qualified to do so.

⚠ **WARNING**: Before making any connections, verify that the circuit breaker(s) are in the off position. Double check all wiring before applying power.

⚠ **WARNING**: Before making any connections, verify that the inverter rotary disconnect switch is in the OFF position.

⚠ **WARNING**: Ensure that all wiring is correct and that none of the wires are pinched or damaged.

⚠ **WARNING**: Do not connect this equipment to an electrical system with other power production sources unless directed to do so in these installation instructions.

⚠ **WARNING**: Only use approved devices, fasteners, and wiring as outlined in these instructions.

⚠ **WARNING**: Ensure that the equipment is properly grounded before applying power.

⚠ **WARNING**: Always de-energize the equipment before servicing. It is best practice to de-energize the equipment before disconnecting it.

⚠ **WARNING**: Only perform service on the equipment as detailed in these instructions, or under the instruction of Lunar Energy.

⚠ **WARNING**: Ensure that power coming from any connected equipment is de-energized before servicing or installing.

⚠ **WARNING**: Do not install the equipment or any of its components near heating equipment.

⚠ **WARNING**: Do not immerse the equipment or any of its components in water or other fluids.

⚠ **WARNING**: Do not open or disassemble the equipment, or any of its components, outside of what is instructed in this manual.

⚠ **WARNING**: Do not inflict mechanical damage (such as dropping, deforming, impacting, cutting, or penetrating with a sharp object) on the equipment or otherwise modify it.

⚠ **WARNING**: Do not heat the equipment. Keep it away from sources of ignition and operate it only

within the permissible temperature range.

⚠ **WARNING**: Do not short-circuit the equipment.

⚠ **WARNING**: Do not use equipment in a manner not specified by the manufacturer. Doing so may cause injury or loss of life, or damage to equipment.

⚠ **WARNING**: Do not use equipment if it is defective, appears to be damaged, or fails to operate.

⚠ **WARNING**: Risk of electric shock and fire. Use only with PV modules with a maximum system voltage rating of 600V or higher.

⚠ **WARNING**: When a ground fault is indicated, normally ungrounded conductors may be grounded.

⚠ **CAUTION**: Ensure that all wire connections are tightened to the factory-specified torque value.

✓ **NOTE**: The equipment is intended to operate with a connection to the Internet. Failure to maintain an Internet connection may affect the warranty.

✓ **NOTE**: The Lunar Battery will not operate as intended unless installed with the Lunar Bridge, Lunar Maximizers, and Lunar Maximizer Hub.

⚠ **AVERTISSEMENT**: Ne stockez pas l'équipement pendant plus de six (6) mois, et ne permettez pas que l'alimentation électrique de l'équipement soit déconnectée pendant plus de six (6) mois, sans placer l'équipement dans un état de stockage approuvé par Lunar Energy.

⚠ **AVERTISSEMENT**: Avant d'effectuer des connexions, vérifiez que le(s) disjoncteur(s) est (sont) en position d'arrêt. Vérifiez à nouveau tout le câblage avant de mettre sous tension.

⚠ **AVERTISSEMENT**: Avant d'effectuer des connexions, vérifiez que le sectionneur rotatif de l'onduleur est en position OFF.

⚠ **AVERTISSEMENT**: Assurez-vous que tout le câblage est correct et qu'aucun fil n'est pincé ou endommagé.

⚠ **AVERTISSEMENT**: Ne connectez pas cet équipement à un système électrique avec d'autres sources de production d'énergie, sauf indication contraire dans ces instructions d'installation.

⚠ **AVERTISSEMENT**: Utilisez uniquement des appareils, des fixations et un câblage approuvés, comme indiqué dans ces instructions.

⚠ **AVERTISSEMENT**: Assurez-vous que l'équipement est correctement relié à la terre avant de mettre sous tension.

⚠ **AVERTISSEMENT**: Mettez toujours l’équipement hors tension avant de procéder à l’entretien. Il est recommandé de mettre l'équipement hors tension avant de le débrancher.

⚠ **AVERTISSEMENT**: N'effectuez l'entretien de l'équipement que comme détaillé dans ces instructions ou sous les instructions d’une personne qualifiée par Lunar Energy.

⚠ **AVERTISSEMENT**: Assurez-vous que l’alimentation provenant de tout équipement connecté est hors tension avant l’entretien ou l’installation.

⚠ **AVERTISSEMENT**: N'installez pas l'équipement ou l'un de ses composants à proximité d'un équipement de chauffage.

⚠ **AVERTISSEMENT**: Ne plongez pas l'équipement ou l'un de ses composants dans l'eau ou autres liquides.

⚠ **AVERTISSEMENT**: N'ouvrez pas et ne démontez pas l'équipement, ou l'un de ses composants, en dehors de ce qui est indiqué dans ce manuel.

⚠ **AVERTISSEMENT**: N'infligez pas de dommages mécaniques (tels que chute, déformation, impact, coupure ou pénétration avec un objet pointu) à l'équipement Ne modifiez pas l'équipement de quelque manière que ce soit.

⚠ **AVERTISSEMENT**: Ne chauffez pas l’équipement. Tenez-le à l'écart des sources de chaleur et faites-le fonctionner uniquement dans la plage de température autorisée.

⚠ **AVERTISSEMENT**: Ne court-circuitez pas l'équipement.

⚠ **AVERTISSEMENT**: N'utilisez pas l'équipement d'une manière non spécifiée par le fabricant. Cela pourrait provoquer des blessures, voire la mort, ou endommager l'équipement.

⚠ **AVERTISSEMENT**: N'utilisez pas l'équipement s'il est défectueux, s'il semble endommagé ou s'il ne fonctionne pas.

⚠ **AVERTISSEMENT**: Risque de choc électrique et d'incendie. Utiliser uniquement avec des modules PhotoVoltaïques avec une tension nominale maximale du système de 600 V ou plus.

⚠ **ATTENTION**: Assurez-vous que toutes les connexions filaires sont serrées au couple spécifié en usine.

✓ **NOTE**: L'équipement est destiné à fonctionner avec une connexion à Internet. Le fait de ne pas maintenir une connexion Internet peut affecter la garantie.

✓ **NOTE**: La batterie Lunar ne fonctionnera pas comme prévu à moins d'être installée avec le Lunar Bridge, les Lunar Maximizers et le Lunar Maximizer Hub.

G. Environmental Conditions

⚠ **WARNING**: Do not expose the equipment to ambient temperatures outside of the storage and operating conditions outlined in this document.

⚠ **WARNING**: The equipment is certified for indoor and outdoor installation. However, the equipment should be installed in a location that prevents damage from flooding, directed water flow, or pressurized water. Ensure that no water sources are above or near the equipment, including downspouts or large sprinklers.

⚠ **CAUTION**: To ensure proper ventilation, do not allow debris to accumulate on or around the equipment.

⚠ **AVERTISSEMENT**: N'exposez pas l'équipement à des températures en dehors des conditions de stockage et de fonctionnement décrites dans ce document.

⚠ **AVERTISSEMENT**: L'équipement est certifié pour une installation intérieure et extérieure. Cependant, l'équipement doit être installé dans un endroit qui évite les dommages dus aux inondations. Assurez-vous qu'aucune source d'eau ne se trouve au-dessus ou à proximité de l'équipement, y compris les descentes pluviales, les arroseurs ou les robinets.

⚠ **ATTENTION**: Pour garantir une ventilation adéquate, ne laissez pas les débris s’accumuler sur ou autour de l’équipement.

H. Warning Symbols

These symbols used in labels on the product indicate important safety information:

	**CAUTION**: Indicates caution is necessary when operating the device or the control near the symbol.
	**RISK OF ELECTRIC SHOCK**: Indicates components that present risk of electric shock.
	**GROUNDING TERMINAL**: Indicates location of grounding connection on the equipment.
	**REFER TO INSTRUCTIONS**: Indicates that the user should refer to operating or installation instructions before proceeding.
O	**OFF**: Indicates the OFF position
I	**ON**: Indicates the ON position

Ces symboles utilisés sur les étiquettes du produit indiquent des informations de sécurité importantes:

	**ATTENTION**: Indique qu'une ATTENTION est nécessaire lors de l'utilisation de l'appareil ou de la commande à proximité du symbole.
	**RISQUE DE CHOC ELECTRIQUE**: Indique les composants présentant un risque de choc électrique.
	**BORNE DE MISE À LA TERRE**: Indique l'emplacement de la connexion à la terre sur l'équipement.
	**RÉFÉREZ-VOUS AUX INSTRUCTIONS**: Indique que l'utilisateur doit se référer aux instructions d'utilisation ou d'installation avant de procéder.

O	**HORS TENSION** : Indique la position HORS TENSION
I	**EN MARCHE** : Indique la position EN MARCHE

I. Qualified Personnel

This manual and the procedures described within are intended for use only by qualified installers and service technicians. Such qualified personnel must possess the following skills and experience:

- Knowledge of the principles and operation of on-grid and off-grid (backup) electrical systems.
- Knowledge of the risks associated with installing and using electrical devices and acceptable mitigation methods.
- Knowledge of installation of electrical devices.
- Knowledge of and adherence to all applicable safety precautions and best practices.

Regulatory Statements

A. Compliance Summary

The product is listed to the applicable product standards shown in the following table for the indicated jurisdictions.

North America	
System	The Lunar System supports multiple configurations as outlined in the PCS section, and the different options are fully compatible with the following models: Lunar ESS: • LE-ESS-20KWH • LE-ESS-15KWH • L2-ESS-15KWH • LE-ESS-20KWH • L2-ESS-20KWH • L2-ESS-25KWH • L2-ESS-30KWH Lunar Bridge: 90-00122 Lunar Inverter: 10-005025 Lunar MSAC: LE-MSAC-01 ConnectDER MSA: V-1-A-X
Components	Battery Block: CAN/UL 1973, UN 38.3 Inverter: UL 1741, UL 1741 SB, UL 1699B(Photovoltaic DC Arc-Fault Circuit-Protection Type 1), CSA C22.2. No. 107.1
Grid Interconnection	IEEE 1547.1-2020, IEEE 1547-2018 (Normal/Abnormal performance category: B/III),SunSpec IEEE 2030.5/CSIP, CA Rule 21
Environmental	FCC Part 15 Class B RoHS Directive 2011/65/EU
Seismic	IEEE 693 (High)

B. Compliance Statements

1. This device complies with Part 15 of the FCC Rules. Operation is subject to the following two conditions:

   (1) This device may not cause harmful interference, and (2) this device must accept any interference received, including interference that may cause undesired operation.

   This device has been tested and found to comply with the limits for a Class B digital device, pursuant to Part 15 of the FCC Rules. These limits are designed to provide reasonable protection against harmful interference in a residential installation. This equipment generates, uses and can radiate radio frequency energy and, if not installed and used in accordance with the instructions, may cause harmful interference to radio communications. However, there is no guarantee that interference will not occur in a particular installation if this equipment does cause harmful interference to radio or television reception, which can be determined by turning the equipment off and on, the user is encouraged to try to correct the interference by one or more of the following measures:

   - Reorient or relocate the receiving antenna.
   - Increase the separation between the equipment and receiver.
   - Connect the equipment into an outlet on a circuit different from that to which the receiver is connected.
   - Consult the dealer or an experienced radio/TV technician for help.

   ⚠ **CAUTION**: Changes or modifications not expressly approved by the party responsible for compliance could void the user's authority to operate the equipment.

   RF Exposure Information:

   This device complies with FCC radiation exposure limits set forth for an uncontrolled environment. In order to avoid the possibility of exceeding the FCC radio frequency exposure limits, human proximity to the antenna shall not be less than 20cm (8 inches) during normal operation.

2. **ISED Notice:**

   This device complies with Innovation, Science and Economic Development Canada license-exempt RSS standard(s). Operation is subject to the following two conditions:

this device may not cause interference, and this device must accept any interference, including interference that may cause undesired operation of the device.

Le présent appareil est conforme aux CNR Innovation, Sciences et Développement économique Canada applicables aux appareils radio exempts de licence. L'exploitation est autorisée aux deux conditions suivantes: l'appareil ne doit pas produire de brouillage, et l'utilisateur de l'appareil doit accepter tout brouillage radioélectrique subi, même si le brouillage est susceptible d'en.

This Class B digital apparatus complies with Canadian ICES-003.

Cet appareil numérique de la classe B est conforme à la norme NMB-003 du Canada.

ISED Radiation Exposure Statement

This device complies with RSS-102 radiation exposure limits set forth for an uncontrolled environment. In order to avoid the possibility of exceeding the ISED radio frequency exposure limits, human proximity to the antenna shall not be less than 20cm (8 inches) during normal operation.

Cet appareil est conforme aux limites d'exposition aux rayonnements de la CNR-102 définies pour un environnement non contrôlé. Afin d'éviter la possibilité de dépasser les limites d'exposition aux fréquences radio de la CNR-102, la proximité humaine à l'antenne ne doit pas être inférieure à 20 cm (8 pouces) pendant le fonctionnement normal.

3. Signage

   Where NFPA 855 signage is required, the installer shall provide it.

Lunar System Specifications

Inverter Block	15 kWh	20 kWh
Model Number	10-005025	
Nominal Voltage	120/240 Vac Split Phase	
Output Voltage Range	210 Vac - 264 Vac	
Grid Frequency	60 Hz	
Maximum Continuous AC Power, on-grid	9.6 kW full sun 7.2 kW no sun	9.6 kW Full sun and no sun
Peak AC Power, off-grid	15 kW for 5s	
Max Load Start Capability	134 LRA[1]	
Maximum Continuous AC Current	40 A	
Overcurrent Protection Device	50 A Breaker	
Operating Input Voltage	380 - 450 Vdc	
Maximum DC Input Current	37.5 A (PV), 30 A (battery)	
Maximum PV Input Power	15 kWdc	
Total Harmonic Distortion	<5%	
Power Factor	0.85 lagging to 0.85 leading	
PV Rapid Shutdown Switch and System Disconnect	Yes, lockable	
CEC Solar to Home/Grid Efficiency	95.5%	

[1] *Subject to base load at the time of motor start.*

Battery Block	
Part Number	90-002802 or 90-06533A[2]
Rated Energy	5 kWh
Operating Voltage Range	190 Vdc - 225 Vdc
Maximum Continuous Charge Power	1.67 kW
Maximum Continuous Discharge Power, on-grid	2.5 kW
Maximum Continuous Discharge Power, off-grid	2.5 kW
Peak Discharge Power, off-grid	3.75 kW (5s)
Chemistry	Lithium-ion (NMC)

[2]*The 5 kWh Battery Blocks may have two different Lunar part numbers; however, they are identical in specifications and can be used interchangeably.*

System	15 kWh	20 kWh
Model Number	LE-ESS-15KWH	LE-ESS-20KWH
Rated Energy	15 kWh	20 kWh
Warranty	12.5 Years 56 MWh AC throughput	12.5 Years 75 MWh AC throughput
Customer Interface	Customer App, Installer App, Fleet Web Portal, APIs, LED	
Operating Modes	Lunar Mode, Solar Self-Consumption, Time-of-use, Backup	
Advanced Software Features	Weather Watch, Virtual Power Plant enabled	
Communication	Wi-Fi, 4G/LTE (CAT M1), Ethernet	

Environmental	
Ingress Rating	ESS: NEMA 3R Inverter Block: NEMA 3R Battery Block: NEMA 3R, IP68
Operating Temperatures	4°F to 122°F (-20°C to 50°C)[3]
Storage Conditions	Absolute Limits: –4°F to 140°F (-20°C to 60°C) < 95% RH 1 month: –4°F to 113°F (-20°C to 45°C) <60%RH 2 months: 32°F to 95°F (0°C to 35°C) <60%RH Up to 24 months: 65°F to 82°F (18°C to 28°C) <60%RH
Altitude	Up to 9843 ft (3000 m)

[3] *Performance may be de-rated at operating temperatures below 0°C (32°F) or greater than 45°C (113°F).*

Mechanical	15 kWh	| 20 kWh
Dimension (L x W x D)	Inverter Block: 10.6'' x 24.4'' x 13.5'' (270 mm x 619 mm x 344 mm)	
	Battery Block: 10.6'' x 24.4'' x 13.5'' (270 mm x 619 mm x 344 mm)	
	48.5''x 24.4'' x 13.5'' (1156 mm x 619 mm x 344 mm)	56.1"x 24.4'' x 13.5'' (1425 mm x 619 mm x 344
Mass	Inverter Block: 42 lb (19 kg) Battery Block: 95 lb (43 kg) LE-ESS-15KWH System: 391 lb (177 kg) for total assembly + brackets LE-ESS-20KWH System: 499 lb (226 kg) for total assembly + brackets	
Mounting	Wall or floor mount	

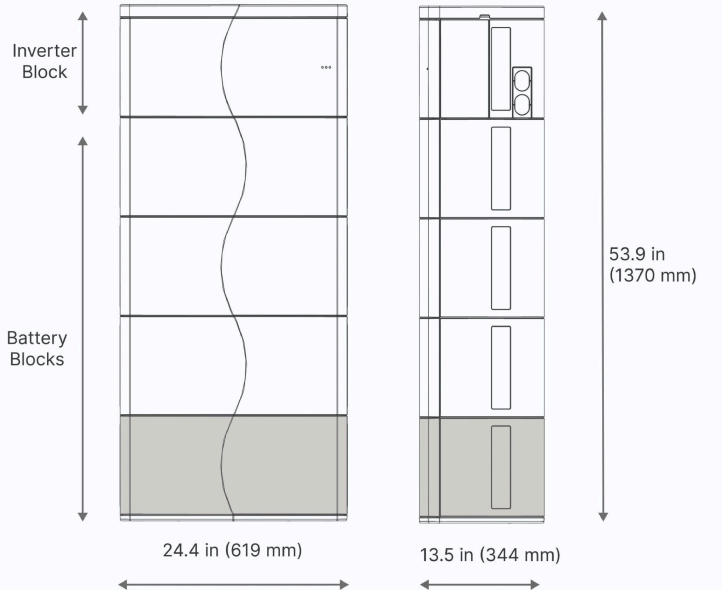

Image shows the 20 kWh Lunar Battery. The lower battery block is shaded to represent the portion removed in a 15 kWh configuration. Refer to the 'Dimensions' section for measurements in each orientation.

Operational Specifications

See Compliance Summary, Performance Specifications, and ***Appendix A: Grid Interconnection Settings*** for the specific grid connectivity requirements as well as standard and test procedures to which the product was designed and evaluated.

The factory locked settings for the Lunar Energy Storage System are detailed in Appendix A. Note that modifications to the settings listed in this section can only be made by a Lunar Energy qualified engineer.

Curtailment to Inverter real power output as well as site export, may be modified by the Lunar Install App or the Lunar Gridshare platform. These user interfaces are available to installers with approved login credentials.

The DC components in the Lunar Battery are a functionally grounded system. The AC line conductors in the Lunar Battery are ungrounded.

The Lunar Battery must have neutral and ground conductors separated at the device. Neutral and earth shall only be bonded at the Service Disconnect for the site.

Arc Fault Detection and Ground Fault Detection checks are initiated when the product is turned ON (via the inverter rotary switch, provided the system is fully installed and commissioned). Both Arc Fault Detection and Ground Fault Detection operate continuously, and both Arc Fault Detection and Ground Fault Detection circuits self test runs every hour, while the system remains active.

Refer to the ***Troubleshooting*** section of this manual for information on LED indicators, including AFCI alerts, and recommended actions for addressing Arc Fault and Ground Fault detections.

Component Overview

The Lunar Battery is the name for the Energy Storage System that includes all of the following components:

- Battery Blocks
- Inverter
- Trunk Harness
- Aesthetic Covers (Battery and Inverter)
- Wall Brackets (Battery and Inverter)
- Foot Bracket
- Bottom Cover
- Top Cover
- Access door on Inverter Cover
- Rotary switch on Inverter

System Overview

The Lunar Battery is a component of the Lunar Energy integrated solar battery and energy storage system. The system consists of a smart hybrid inverter, a modular battery system, a microgrid interconnect device, and module-level power electronics that allow control of solar generation, energy storage, and loads.

A. System Diagrams

Whole Home: Lunar System with Service Disconnect at Lunar Bridge

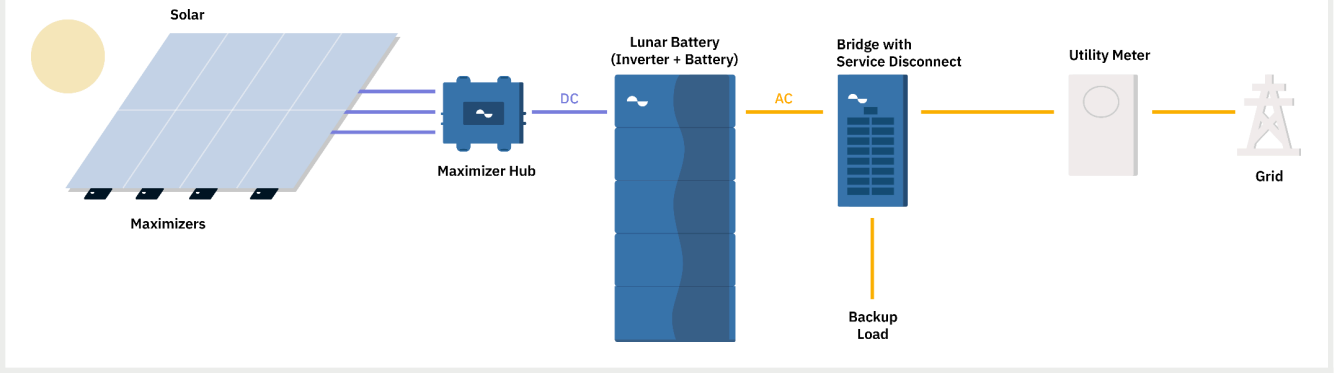

Whole Home: Lunar System with Service Disconnect at Utility Meter

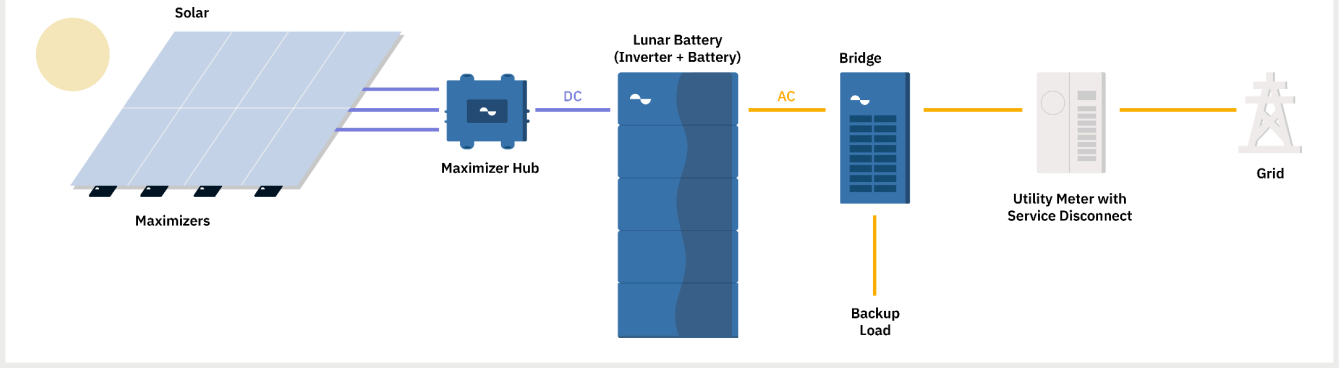

Partial Home: Lunar System with Service Disconnect at Lunar Bridge

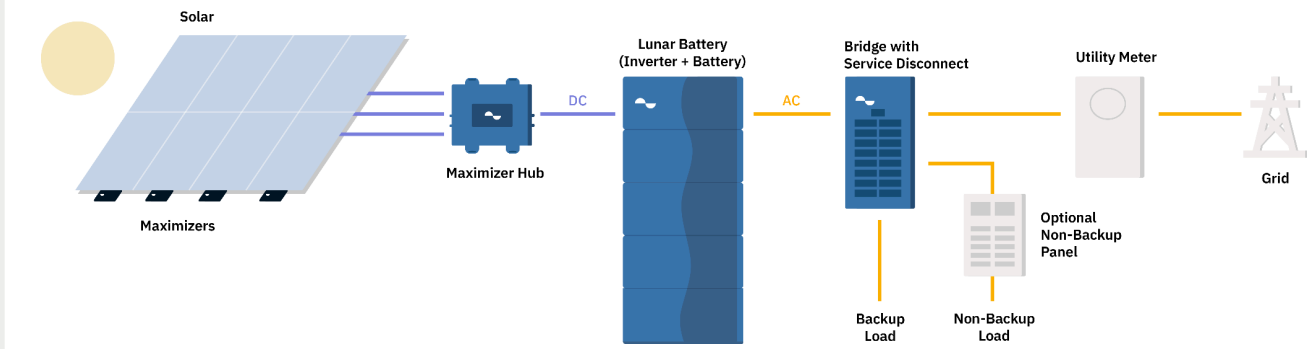

Partial Home: Lunar System with Service Disconnect at Lunar Bridge

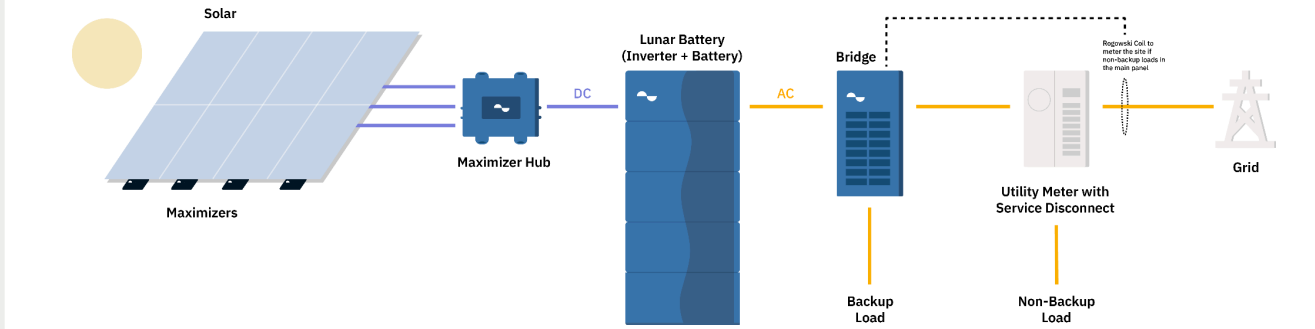

B. Battery System Configurations

The Lunar Battery is a modular energy storage system, consisting of a hybrid inverter and multiple battery blocks. The Lunar Battery is configurable to allow installations with a capacity of 15 or 20 kWh (three or four 5 kWh Battery Blocks).

Package	Content	Lunar Part Number
Inverter	Inverter Block Wall Bracket Aesthetic Cover EMC Cover Conductive Tape Bug Barriers Conduit Covers	90-003540
5 kWh Battery Block	5 kWh Battery Block Wall Bracket Aesthetic Cover Aux Floor Mount Bracket	90-002802 or 90-06533A[1]
15 kWh Hardware Kit	Top Cover Bottom Cover (with foot bracket pre-assembled) Trunk Harness Wall Bracket Screws	90-06823A
20 kWh Hardware Kit	Top Cover Bottom Cover (with foot bracket pre-assembled) Trunk Harness Wall Bracket Screws	90-001223

[1] *The 5 kWh Battery Blocks may have two different Lunar part numbers; however, they are identical in specifications and can be used interchangeably.*

Inverter

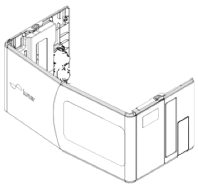

1x

Aesthetic Cover

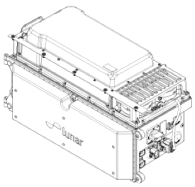

1x

Inverter

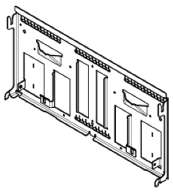

1x

Wall Bracket

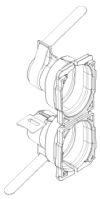

2x

Bug Barriers

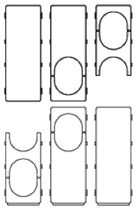

1x

Conduit Cover kit



4x

Conductive Tape

Battery Block

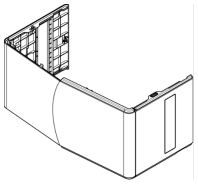

1x

Aesthetic Cover

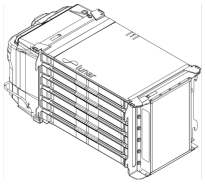

4x

Battery Block

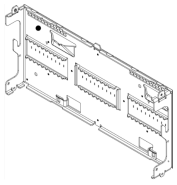

1x

Wall Bracket

Hardware Kit

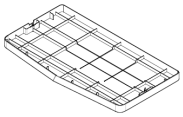

1x

Top Cover

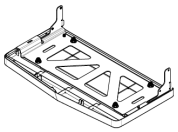

1x

Bottom Cover with Foot Bracket

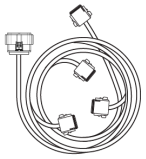

1x

Trunk Harness



10x

Wall Bracket Screws

C. Solar System Configurations

Any solar installation connected to a Lunar Battery must utilize Lunar Maximizers and Lunar Maximizer Hub, and the installation must comply with the guidelines in the ***Lunar Maximizer and Maximizer Hub Installation Manual***. Lunar Maximizers are module-level power electronics designed for DC-to-DC conversion. It is important to note that the Lunar Battery's DC connections may only be made to Lunar Maximizers and Lunar Battery Blocks; direct connections to PV modules are strictly prohibited.

The Lunar Maximizer and Maximizer Hub Installation Manual outline compatible PV modules, as well as PV stringing requirements, such as minimum and maximum series string length.

For maximum PV DC power input allowances, see ***Lunar System Specifications, Lunar Inverter*** section.

Important: At this time, the Lunar Battery is only allowed to be connected to a single series Maximizer string.

D. Battery to Lunar Maximizer & Maximizer Hub Communication

The Lunar Battery communicates with the Maximizer Hub through Power-line Communication (PLC) over the field-installed PV DC circuit. Additionally, the wireless mesh network among the Lunar Maximizers communicates information with the Lunar Battery via the Maximizer Hub, utilizing the same PLC circuit.

E. Microgrid Interconnect Device (MID)

The Lunar Battery is required to be installed with the Lunar Bridge, a microgrid interconnect device. For more details about the MID components, refer to the ***Lunar Bridge Installation Manual***.

F. Battery to Lunar Bridge Connections

The Lunar Battery connects to the Lunar Bridge via the following connections:

Low voltage connections:
The cable is a 4-wire configuration, comprising a 13V+ power circuit, a signal ground, and two wires for the CAN Hi and CAN Low communication circuit.

High voltage connections:
The Lunar Battery AC circuit and its overcurrent protection must be installed on the backup side, which is the load side of the relay within the Lunar Bridge. For simplicity, the easiest installation method is

usually to place the ESS breaker directly inside the Lunar Bridge. Alternatively, the ESS breaker can be installed in a subpanel that connects to the Lunar Bridge.

⚠ **WARNING**: Ensure the grounded conductor is properly connected to the installation grounding conductor at the service disconnect.

⚠ **AVERTISSEMENT**: Assurez-vous que le conducteur de terre est correctement connecté au conducteur de mise à la terre de l'installation au niveau du sectionneur de service.

G. Lunar Battery Communication

The Lunar system is equipped with LTE CAT M1 cellular connectivity and includes a secondary Wi-Fi access point. The secondary Wi-Fi point is used for commissioning the system with the Lunar Installer app.

The preferred connection types are:

- 2.4 GHz Wi-Fi
- Ethernet connection (wired)

Site Requirements

A. Location

The Lunar Battery can be installed indoors or outdoors, and can be wall-mounted or floor-mounted. The install location must abide by the clearances, access, and wiring configurations outlined in the ***Site Requirements; Section B. System Clearances***. Additionally, the installation location must also be consistent with the environmental requirements for the system, including temperature and moisture, as well as the system's ingress rating.

The units are only intended to be installed in attached or detached garages, sheds, enclosed utility closets, basements, storage or utility spaces within dwelling units and are not intended for installation in habitable spaces and living spaces in dwelling units.

✓ **NOTE**: All installations must conform to the laws, regulations, codes and standards applicable in the jurisdiction of installation. Smoke alarms are to be provided in the residence in accordance with local building, fire, and installation codes.

✓ **NOTE**: In Canada, CSA C22.1 limits the indoor installation of residential ESS to a garage, a free standing structure or storage building

✓ **NOTE**: Toutes les installations doivent être conformes aux lois, réglementations, codes et normes applicables dans la juridiction d'installation. Des détecteurs de fumée doivent être fournis dans la résidence conformément aux codes locaux du bâtiment, d'incendie et d'installation.

✓ **NOTE**: Au Canada, la CSA C22.1 limite l'installation intérieure des SSE résidentiels à un garage, une structure autoportante ou un bâtiment de stockage.

B. System Clearances

The install location must allow for certain minimum and maximum distances between system components and between the equipment and architectural features such as walls, columns, ceilings, or from openings (e.g. windows, doors, HVAC inlets or other operable openings). These distances are required for installer, operator and service access, proper ventilation, as well as for Compliance and Fire Code setback requirements. The install location must comply with all local codes for access to equipment doors, panels and controls. Refer to the figure and table below when planning the install locations of system components.

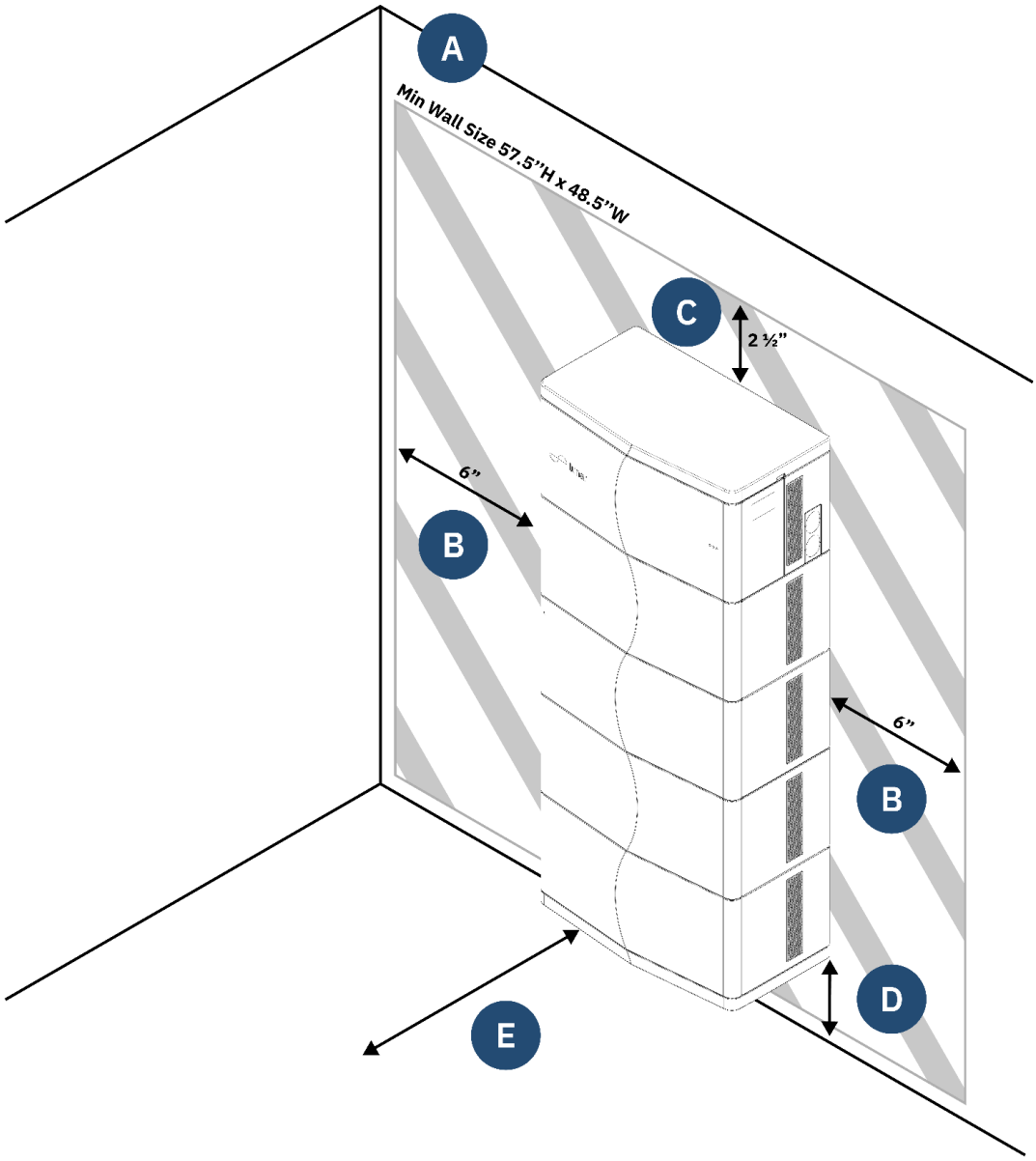

**Example shows a 20kWh Lunar system (4 x 5kWh Battery Blocks)*

Wall Clearances		
A	Minimum wall space for installation of system	57.5 in high x 48.5 in wide (152cm high x 123cm wide)
B	Minimum clearance on sides of installed system	Minimum clearance of 6 in (15.24 cm) to all obstructions. Additional clearance is recommended but not required from any source that blows hot air towards the ESS. Exposure may result in power limiting behavior from the ESS hot air coincides with hot weather and high power demands. Minimum clearance to doors and windows directly entering the dwelling unit (not applicable to attached or detached garages): • Abide by local Code required clearances
C	Minimum clearance above-installed system	2.5 in (15 cm)
D	Maximum height above ground/floor to bottom of ESS	For rotary switch on inverter to be 6’-7” from grade: • 29 in (74 cm) for 20 kWh • 42.5 in (108 cm) for 15 kWh Where external RSID is field installed less than 6’-7” from grade: No limit
E	Minimum clearance in front of battery	Abide by local Code required clearances

NOTE: Required separation distances to other ESS may be reduced to the above minimums

based upon large scale fire testing. Equipment tested according to ANSI/CAN/UL 9540A:2019 Fourth Edition, Dated November 12, 2019 - Test Method for Evaluating Thermal Runaway Fire Propagation in Battery Energy Storage Systems. CSA Group Project 80122019, Laboratory Test Data – UL 9540A Checklist and Test Result (Unit Level), dated 2023-03-08 available upon request.

✓ **NOTE**: Les distances de séparation requises avec les autres ESS peuvent être réduites aux minimums ci-dessus sur la base d'essais d'incendie à grande échelle. Équipement testé conformément à la norme ANSI/CAN/UL 9540A : 2019, quatrième édition, datée du 12 novembre 2019 - Méthode d'essai pour évaluer la propagation des incendies par emballement thermique dans les systèmes de stockage d'énergie par batterie. Projet 80122019 du Groupe CSA, Données d'essais en laboratoire – Liste de contrôle et résultat d'essai UL 9540A (niveau unité), daté du 08/03/2023, disponible sur demande.

C. Maximum Distance between System Components

The Lunar Battery supports the following distances between Lunar system components and between the Lunar system and the home electrical systems. Wire selection must meet local codes and is in some cases also based on the distance of the cable run.

Refer to the table below when planning the install locations of system components.

Maximum Wire Lengths between System Components		
Wiring Distance	**Wire Gauge**	**Maximum Wire Length**
Inverter to Maximizer Hub	12 AWG -4 AWG	200 ft (61 m)
Inverter to Bridge Communication	Cat5e, Cat6, Cat6a, or 14 - 22 AWG (shielded, twisted or un-twisted)	95 ft (29.5 m)
Inverter to Bridge AC	8 AWG - 4 AWG	95 ft (29.5 m)

D. Cooling & Ventilation

The Lunar Battery is air-cooled and must be installed with the clearances specified in ***Site Requirements, Section B: System Clearances*** and in a location that meets the ambient temperature guidelines outlined in ***Site Requirements, Section D: Cooling & Ventilation***.

Mounting in direct sunlight is permitted; however, in hotter climates, this may reduce system operating efficiency, peak power (DC & AC), and the product's lifespan. It is recommended to avoid direct sunlight in these climates.

E. Operating Temperature Range

The Lunar Battery is rated for continuous operation in ambient temperatures ranging from –4°F (–20°C) to 122°F (50°C).

The Lunar Battery may experience limited power operation in the Operating Temperature Range shown in the figure below.

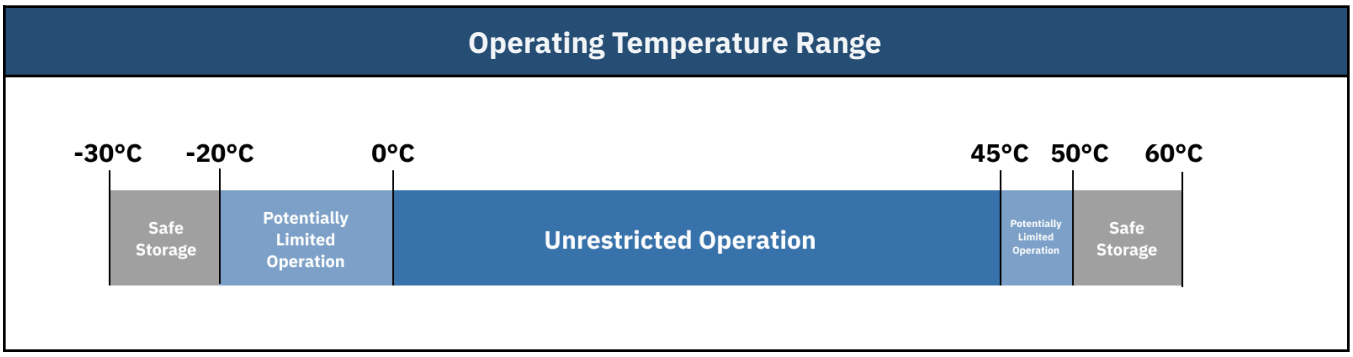

For optimum performance:

- In hot climates, install where shaded.
- In cold climates, install where protected from wind

Below 32°F (0°C), the batteries may begin to curtail peak charge power. Below 14°F (-10°C), the batteries may begin to curtail peak discharge power.

Each individual Battery Block is equipped with a 90 Watt resistance heater, with power output dynamically controlled based on the cell temperature measured from that specific Battery Block.

Above 113°F (45°C), the inverter and batteries may begin to curtail peak power. The inverter will decrease power to 3kW at a component measured temperature of 122°F (50°C).

NOTE: System functions are determined based on internal component temperatures. Therefore duration at a given ambient temperature impacts operation. Sustained ambient temperatures outside of the 'unrestricted operation' zone are necessary to curtail system operation. Additionally, sun, wind, or other environmental conditions at a given ambient temperature may alter the system behavior.

NOTE: The Lunar Battery is warrantied for installation in direct sunlight; however, solar radiation increases component temperatures.

NOTE: Les fonctions du système sont déterminées en fonction des températures des composants internes. Par conséquent, la durée à une température ambiante donnée a un impact sur le fonctionnement. Des températures ambiantes soutenues en dehors de la zone de « fonctionnement sans restriction » sont nécessaires pour réduire le fonctionnement du système. De plus, le soleil, le vent ou d'autres conditions environnementales à une température ambiante donnée peuvent modifier le comportement du système.

NOTE: La batterie Lunar est garantie pour une installation en plein soleil ; cependant, le rayonnement solaire augmente la température des composants.

F. Placard & Directory Requirements

For systems governed by NEC Articles 705 (Interconnected Electric Power Production Sources), 706 (Energy Storage Systems), and 710 (Stand-Alone Systems), a placard or directory is required. This placard must clearly indicate the location of the disconnecting means for each individual power source. Please note that this placard is not provided by Lunar.

Tools & Materials

A. Required Tools

The following tools are the minimum required for installation of the Lunar Battery. Additional standard construction tools may be needed.

- Personal protective equipment rated for electrical installation (safety glasses, insulated gloves, protective footwear)
- Drill with up to 1/4" diameter drill bits
- Torque screwdriver up to 45 in-lbs with 1/8" hex, 4mm hex, and T25 hex
- Wire stripper/cutter for 4 AWG - 24 AWG wires
- Multimeter
- Lunar Lifting Tool (90-005336)

B. Required Materials

The following materials are the minimum required for installation of the Battery. Additional standard materials and consumables may also be needed.

- Anchoring fasteners (refer to the ***Anchoring Details*** section)
- UL 514B electrical conduit, fittings, and adapters (3/4” - 1” trade size)

  NOTE: Metallic conduit required.
- Power connections: minimum 600V rated copper (Cu) cable
- Communication connections: 4-conductor shielded copper (Cu) cable (24 AWG - 14 AWG)

Installation Preparation

A. Unboxing

The Lunar System consists of several components, each shipped in separate boxes.

A standard 20 kWh system includes the following:

Lunar Part Number	Quantity	Description
90-002802 or 90-06533A	4	Battery With Cover and Brackets, Boxed, Lunar Blue
90-003540	1	Inverter, Inverter Cover, Inverter wall bracket, Boxed, Lunar Blue
90-001221	1	Bridge, Boxed, Lunar Blue
90-002878	1	20 Maximizers, Boxed
90-004034	1	Maximizer Hub, Boxed
90-001223	1	20 kWh Hardware Kit, Lunar Blue

A standard 15 kWh system includes the following:

Lunar Part Number	Quantity	Description
90-002802	3	Battery With Cover and Brackets, Boxed, Lunar Blue
90-003540	1	Inverter, Inverter Cover, Inverter wall bracket, Boxed, Lunar Blue
90-001221	1	Bridge, Boxed, Lunar Blue
90-002878	1	20 Maximizers, Boxed
90-004034	1	Maximizer Hub, Boxed
90-06823A	1	15 kWh Hardware Kit, Lunar Blue

B. Open the Box and Inspect the Battery

Review the parts list to verify the box contents are complete. If any parts are missing, contact Lunar Energy Install Support for assistance.

Inspect the contents for damage. If there is any visible damage, do not install the component, and contact Lunar Energy Install Support to arrange the return of the damaged component. Refer to www.lunarenergy.com for contact information and instructions for returns.

⚠ **WARNING**: If a component is damaged in any way, do not install the component. Contact Lunar Energy Customer Service for assistance.
⚠ **AVERTISSEMENT**: Si un composant est endommagé de quelque manière que ce soit, ne l'installez pas. Contactez le service client de Lunar Energy pour obtenir de l'aide.

Mounting the Battery Brackets

For both wall-mounted and floor-mounted Battery systems, there are two methods for assembling the Battery brackets. Wall-mounting and floor-mounting installation procedures for the Lunar Battery remain the same for both the 20 kWh and 15 kWh models. The example imagery shown features 20 kWh battery systems.

Recommended:

1. Wall mount: Attach the brackets to the wall one at a time, starting from the bottom.
    - **Important:** The side fasteners that connect battery brackets to each other are optional for wall mounting and required for floor mounting.
2. Floor mount: Prior to mounting, assemble the Battery Block brackets into one unit, using the side fasteners to create 1 large bracket.

✓ **NOTE**: In both mounting methods, the brackets are placed starting from the bottom.

✓ **NOTE**: Dans les deux méthodes de montage, les supports sont placés en commençant par le bas.

The figures below show bracket attachments and wall anchor points for a wall-mounted system and a floor-mounted system. The table below lists fastener and torque specifications.

Fastener & Torque Specifications		
Attachment	**Fastener**	**Type & Size**
Foot bracket to Battery bracket	*Provided*	Provided with Lunar ESS M5x12, BHT, Flanged, DP
Battery wall bracket to Battery wall bracket (optional)	*Provided*	Provided with Lunar ESS M5x12, BHT, Flanged, DP, Patch
Battery wall bracket to Inverter wall bracket		
Battery wall bracket to Wall	Installer choice	Provided by Installer Minimum diameter ¼” lag screw
Inverter wall bracket to Wall	Installer choice	Provided by Installer Minimum diameter ¼” lag screw

Anchoring Details

Anchoring requirements:

For wall mounting:

- Minimum 2 studs with fasteners
- Minimum ¼” diameter wall stud fastener
- Minimum 2” embedment per wall stud fastener
- Minimum 2 fasteners per Battery, and Inverter wall bracket

For floor mounting:

- Minimum 1 stud with fastener, and 1 fastener using anchors.
- Minimum ¼” diameter wall stud fastener
- Minimum 2” embedment per wall stud fastener

⚠ **WARNING**: Do not install the product without anchoring it to a suitable wall capable of supporting the system as required by the installation type.

⚠ **AVERTISSEMENT**: N'installez pas le produit sans l'ancrer à un mur approprié capable de supporter le système comme l'exige le type d'installation.

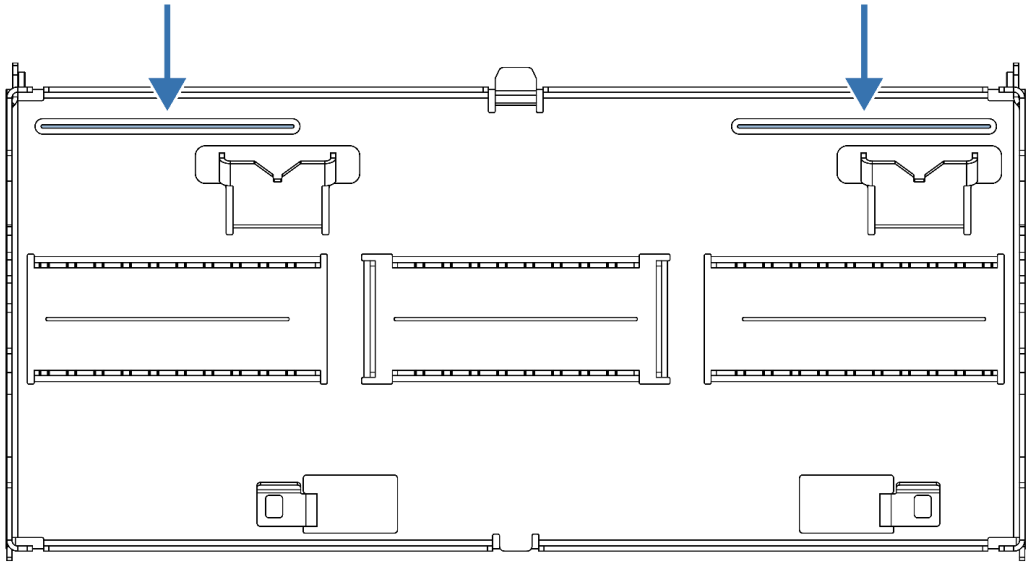

Figure 1. Battery Block bracket attachment points for a wall-mounted system.

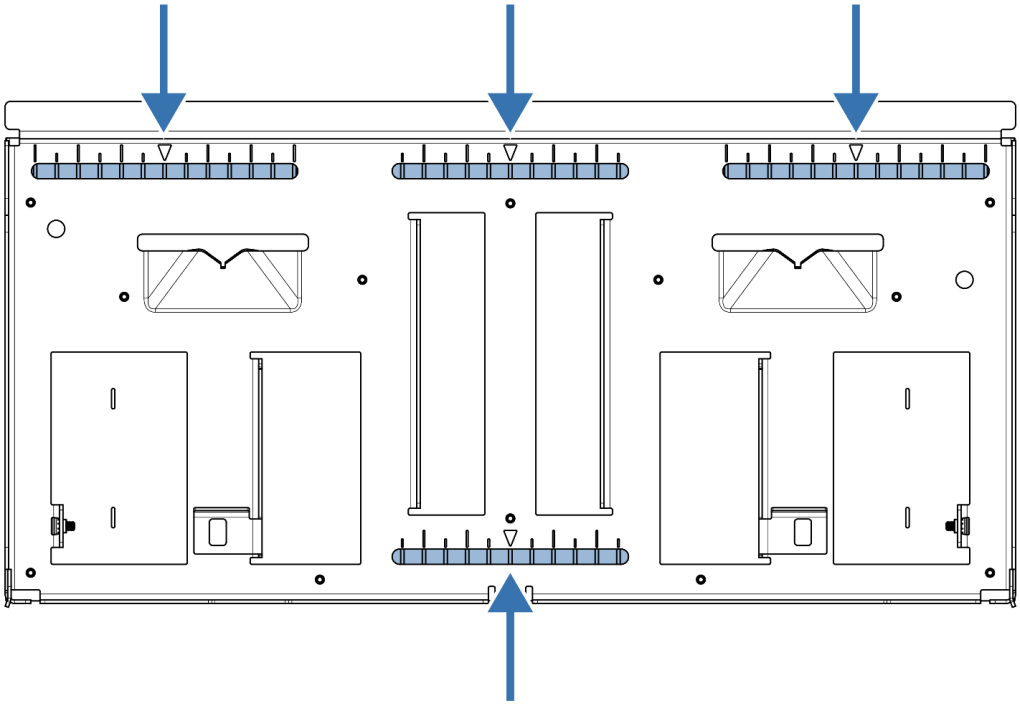

Figure 2. Inverter bracket attachment points.

A. Wall-mounted Battery system

1. Measure to determine the location of the lowest battery bracket.
2. Locate two wall studs (drill pilot holes if necessary).
3. Align and secure the lowest battery bracket, using the appropriate fasteners specified in the ***Anchoring Details*** section.

> ✓ **NOTE**: It helps to push down on the bracket when fastening to avoid a gap between wall brackets. The maximum gap between wall brackets must be less than 1/16" to avoid issues with the aesthetic covers. For visual reference 1/16” is half of the thickness of the battery wall bracket.

> ✓ **NOTE**: Il est utile d'appuyer sur le support lors de la fixation pour éviter un espace entre les supports muraux. L'espace maximum entre les supports muraux doit être inférieur à 1/16" pour éviter des problèmes avec les couvercles esthétiques. Pour référence visuelle, 1/16" correspond à la moitié de l'épaisseur du support mural de la batterie.

4. Repeat this process for the required number of battery brackets and the inverter bracket.
5. Locate the Bottom plate in the Hardware Kit. Attach the Bottom Cover with foot bracket to the first battery bracket using the provided fasteners, and torque to the value specified above.

> ✓ **NOTE**: If it is more convenient, you can also attach the Bottom Cover with foot bracket first, before all Battery Block brackets have been attached to the wall.

> ✓ **NOTE**: Si cela est plus pratique, vous pouvez également fixer d'abord le couvercle inférieur avec le support de pied, avant que tous les supports du bloc de batterie n'aient été fixés au mur.

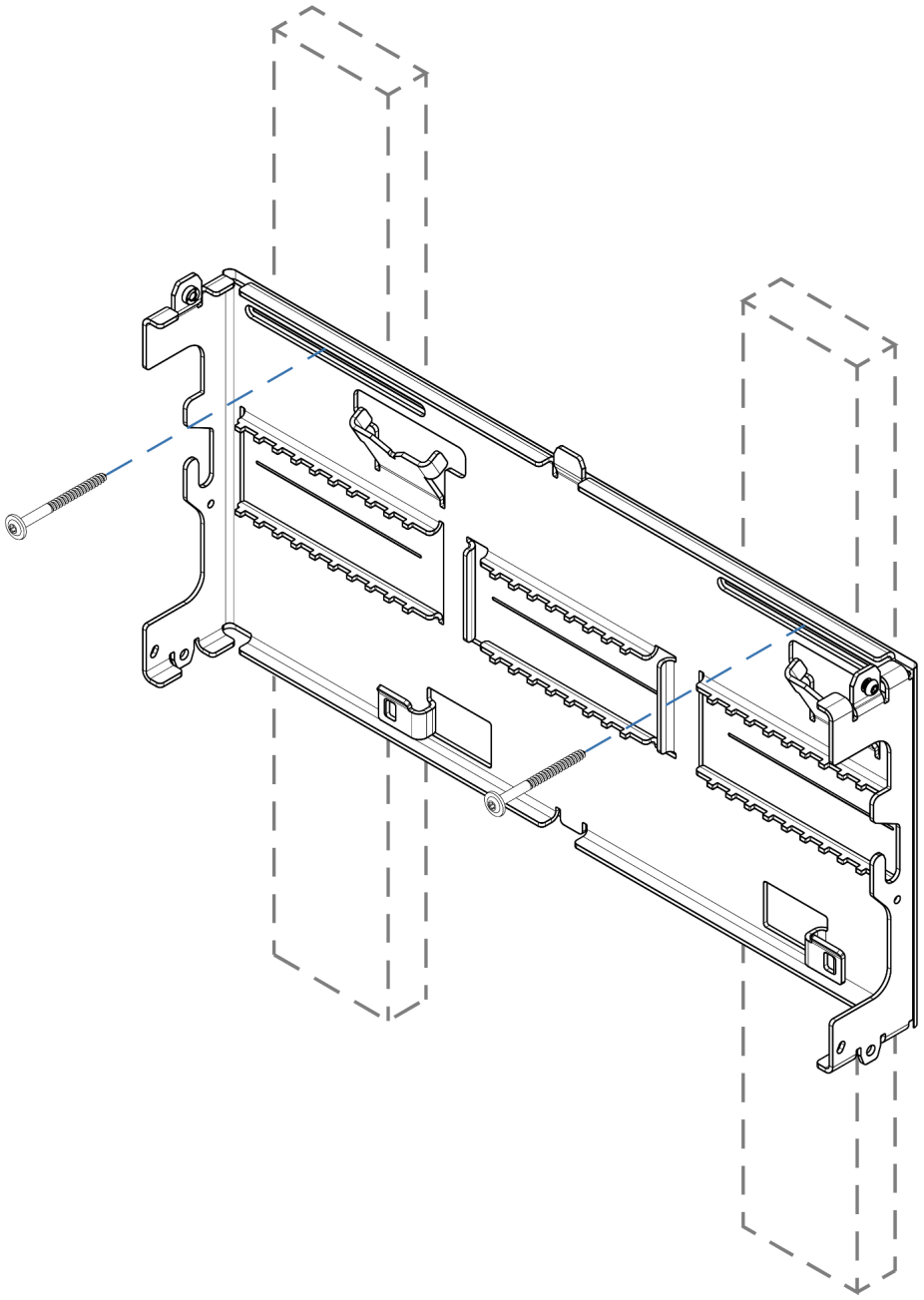

Figure 3. Attaching bottom Battery bracket to the wall

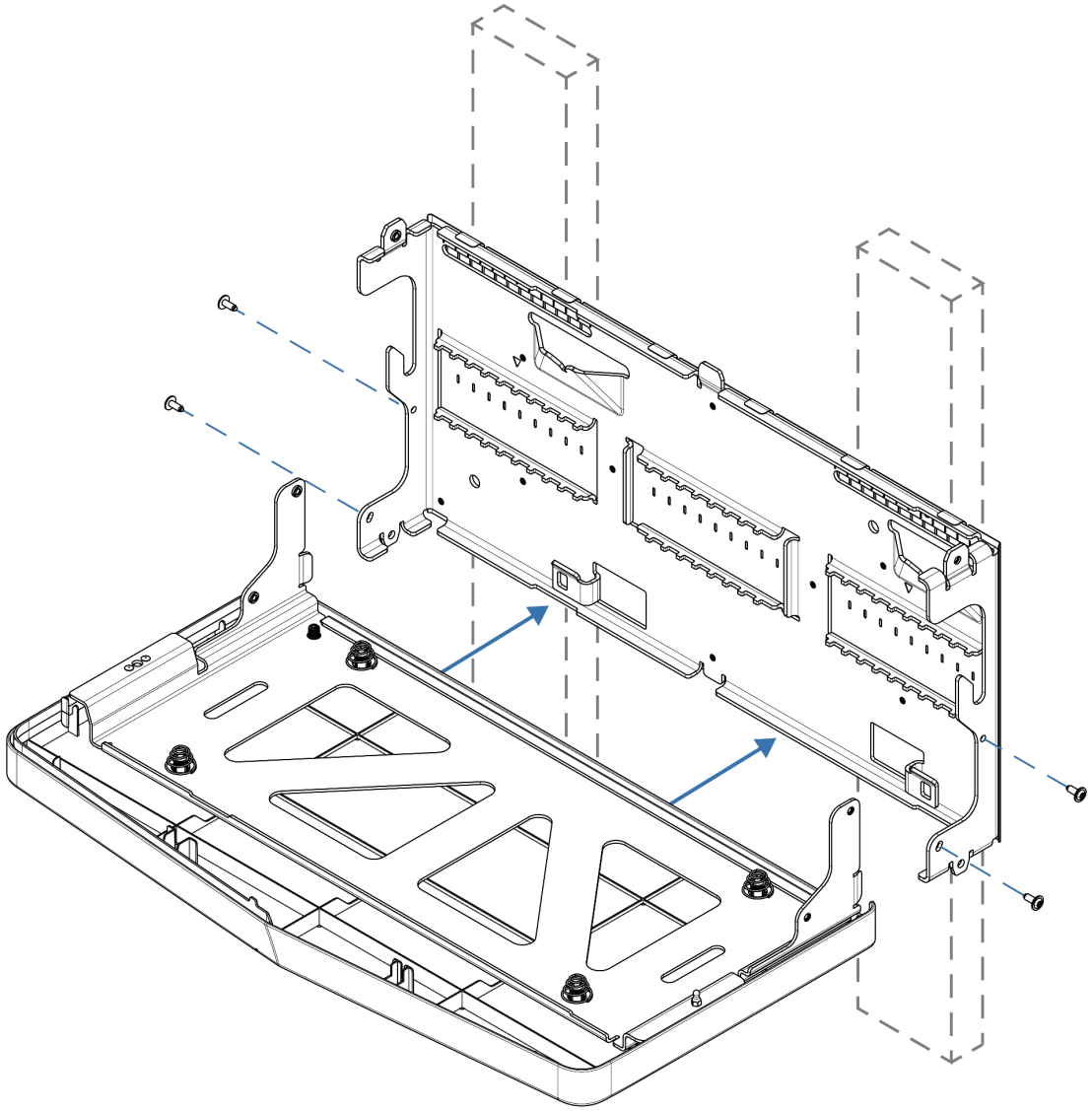

Figure 4. Attaching the Bottom Plate to the first Battery Block wall bracket .

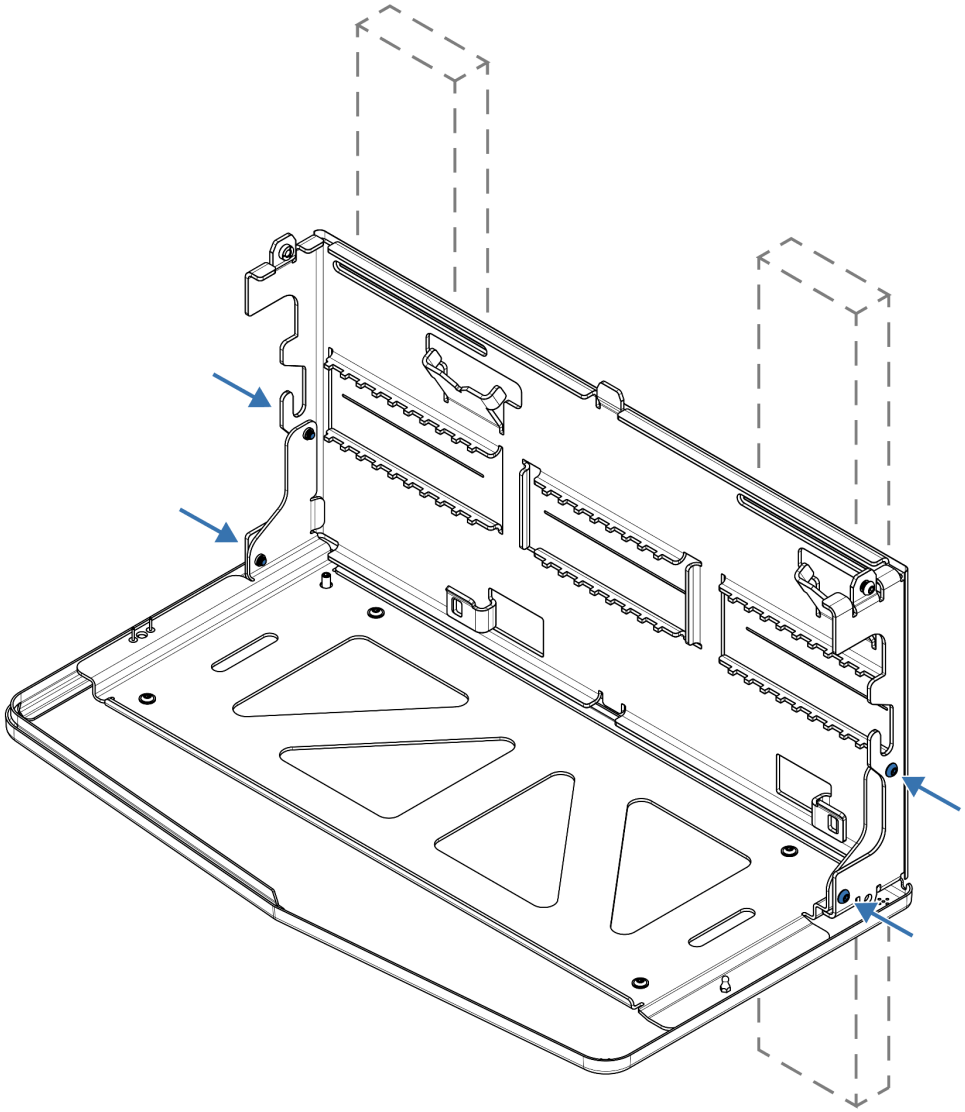

Figure 5. T25 screws used to attach the bottom cover to the first battery bracket.

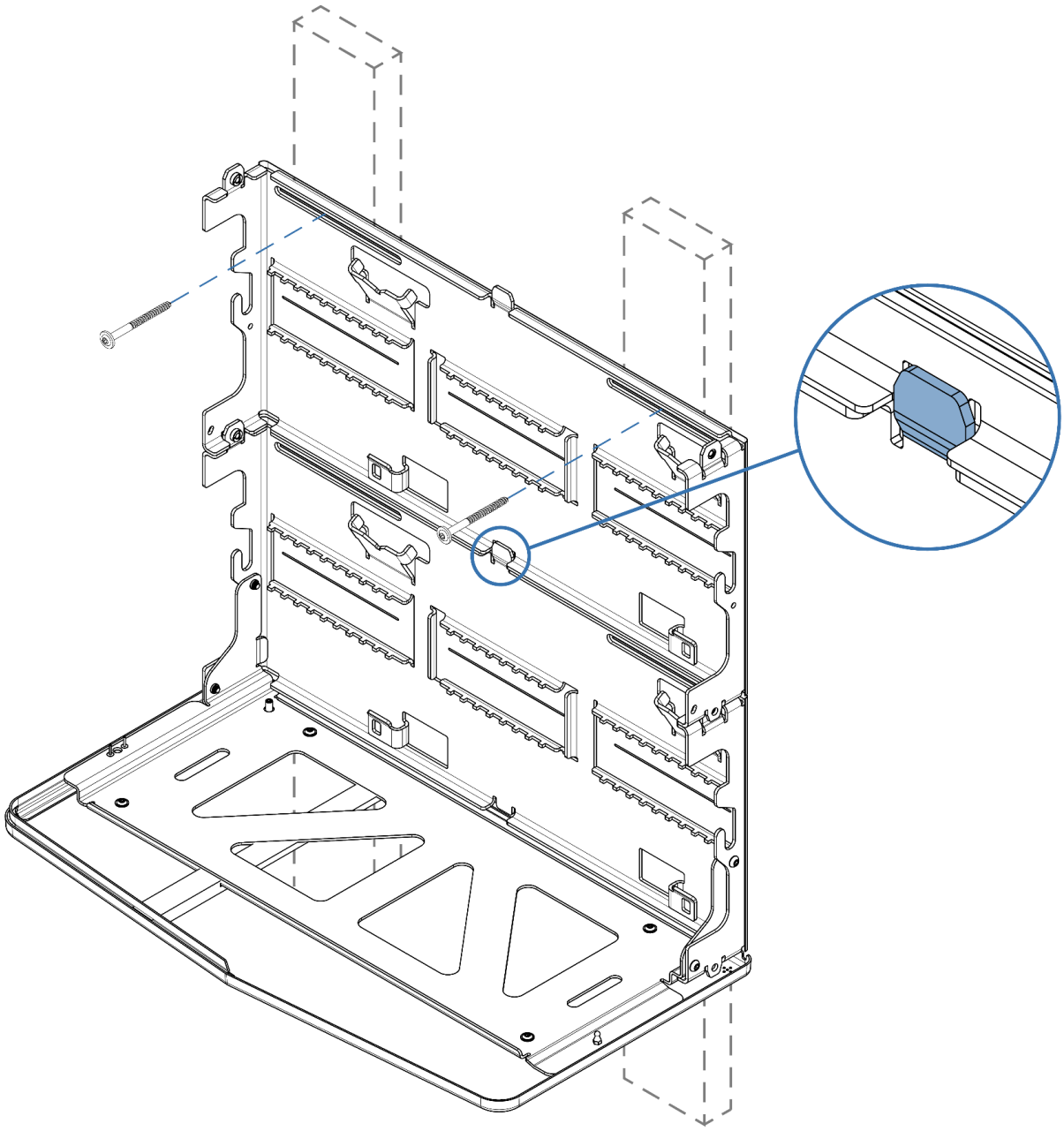

Figure 6. Attaching the second Battery wall bracket to the first battery wall bracket. Repeat this process for remaining battery wall brackets 3 & 4.

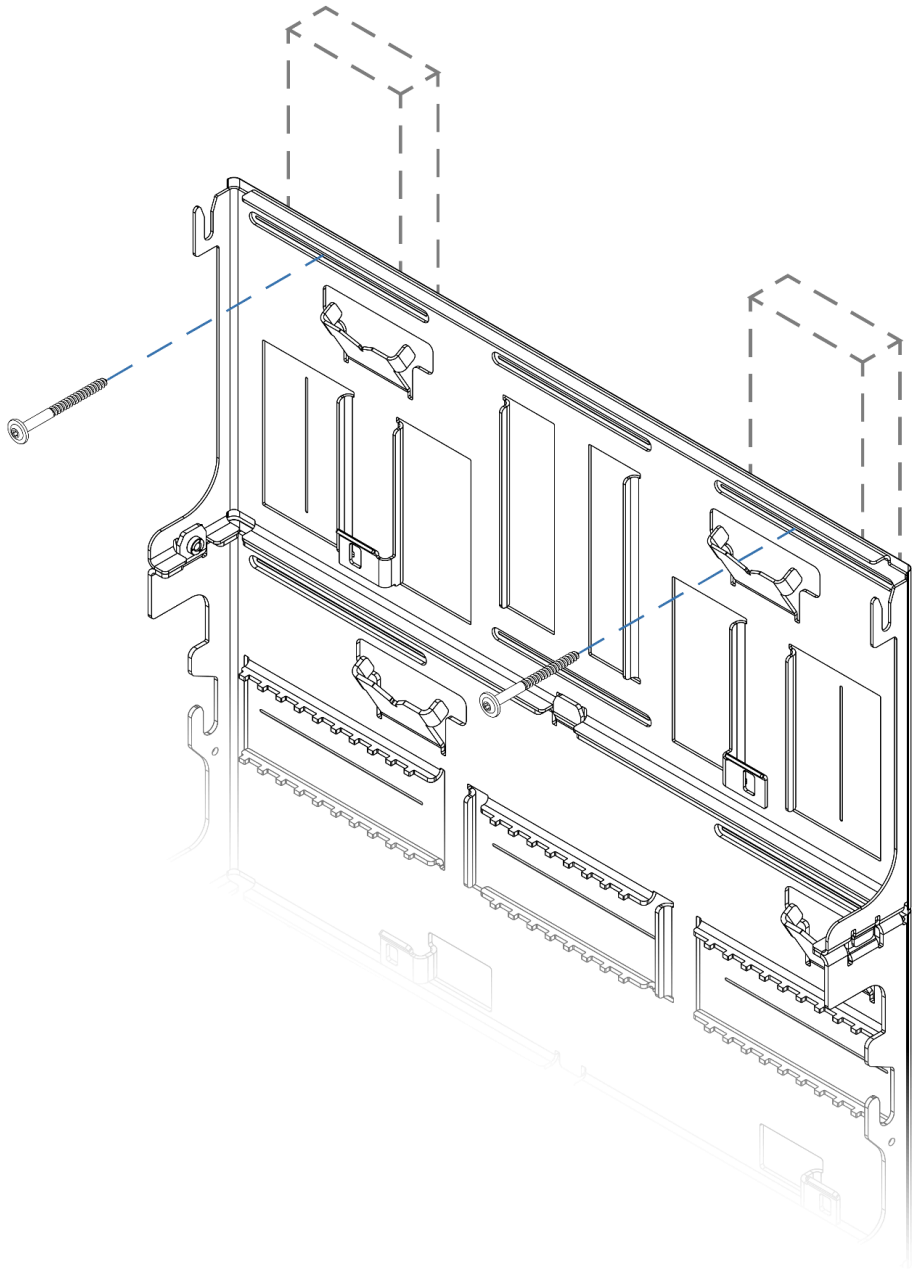

Figure 7. Attach the inverter bracket to the wall using lag screws.

NOTE: For wall mounting on uneven surfaces, the following steps are recommended:

1. Mount first (bottom) battery bracket
2. Stack the remaining battery brackets without fastening them to the wall (yet)
3. Use the optional side fasteners to secure battery brackets to each other
4. Fasten all brackets to the wall, stacking washers between the wall and the bracket as needed.

NOTE: Pour un montage mural sur des surfaces inégales, les étapes suivantes sont recommandées :

A. Montez le premier support de batterie (inférieur)
B. Empilez les supports de batterie restants sans les fixer (encore) au mur
C. Utilisez les attaches latérales en option pour fixer les supports de batterie les uns aux autres
D. Fixez tous les supports au mur, en empilant les rondelles entre le mur et le support si nécessaire.

B. Floor-mounted Battery System

For a floor-mounted Lunar System a firm and solid floor surface is required (one that will not result in ground settling).

1. Adjust the leveling feet to ensure they are properly aligned and engaged with the level concrete floor.

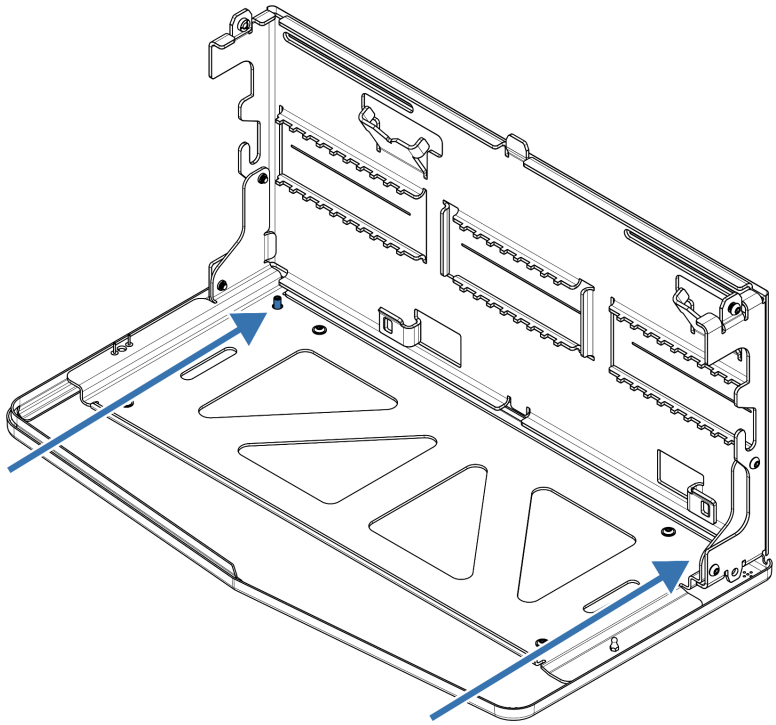

Figure 8. Leveling feet on the bottom plate.

2. For floor mount installations only, use the provided T25 side fasteners to secure the brackets together.

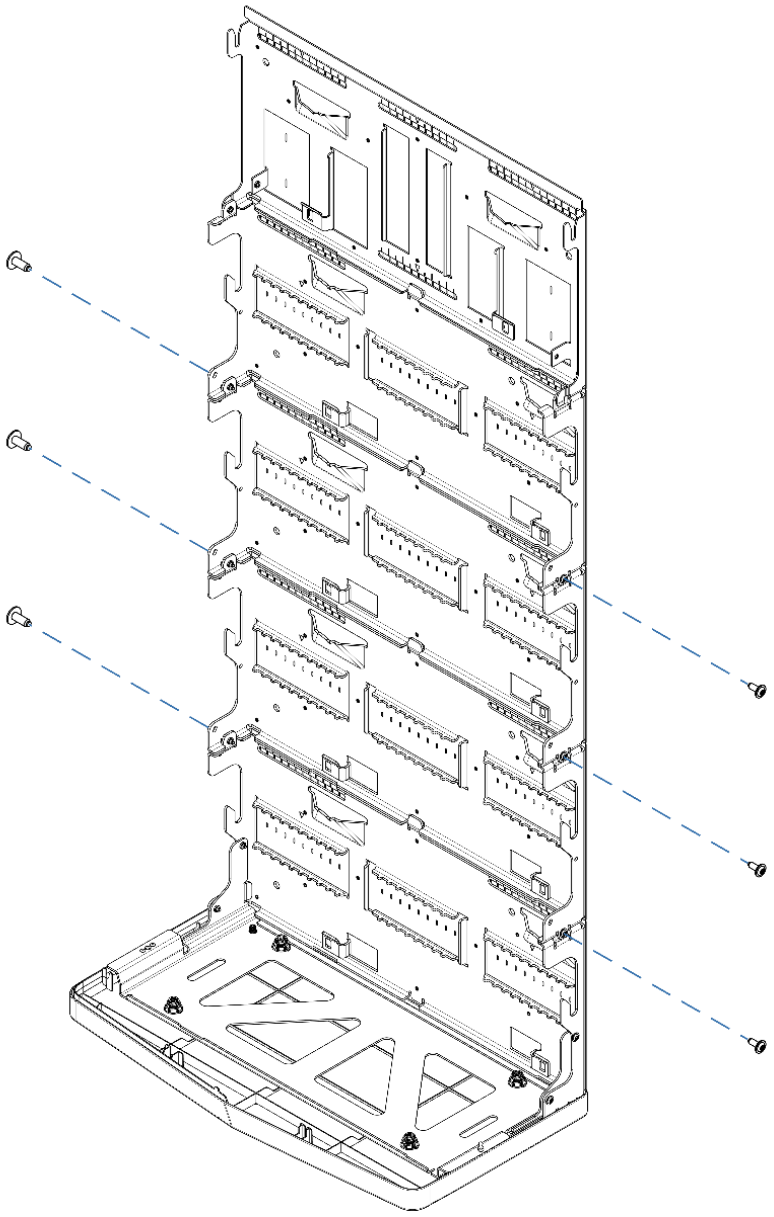

Figure 9. T25 fasteners used to secure the battery brackets together.

3. When floor mounting, the Battery Block and the Inverter wall bracket must remain securely fastened to the wall, as illustrated in **Figures: 4, 5, 6, and 7**.

Installing the Battery Blocks

The installation procedure for Battery Blocks follows the same steps for both wall-mounted and floor-mounted systems.

⚠ **CAUTION**: Battery Blocks are heavy. Two people are needed to lift and move each Battery Block. Use the Lunar Battery Lifting Tool (available separately from Lunar Energy) to remove each Battery Block from its packaging and to install in its bracket.

✓ **NOTE**: Battery Blocks must be installed from bottom to top (and removed top to bottom).

⚠ **ATTENTION**: Les blocs de batterie sont lourds. Deux personnes sont nécessaires pour soulever et déplacer chaque bloc de batterie. Utilisez l'outil de levage de batterie Lunar (disponible séparément auprès de Lunar Energy) pour retirer chaque bloc de batterie de son emballage et l'installer dans son support.

✓ **NOTE**: Les blocs de batterie doivent être installés de bas en haut (et retirés de haut en bas).

1. Orient the Lifting Tool with the Battery Block so that the Lunar logos align. Then secure the lifting tool on the Battery Block by pushing in and up. Check for engagement at the 4 contact points. The lifting tool should hold itself in place.

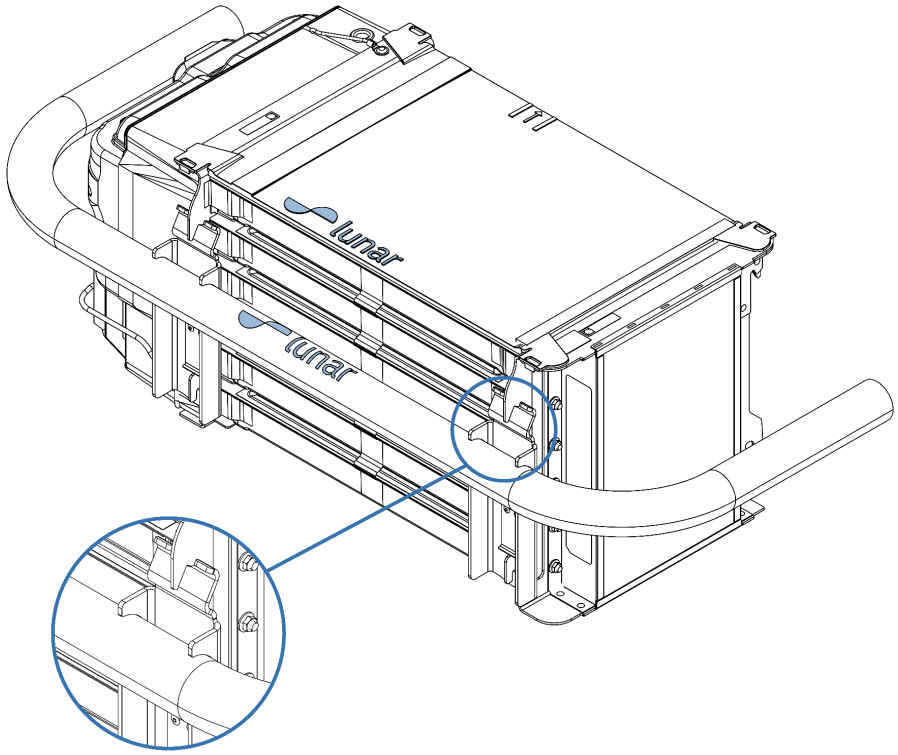

Figure 11. Lunar lifting tool attachment points.

2. With the lifting tool in place, lift the first Battery Block from its box.

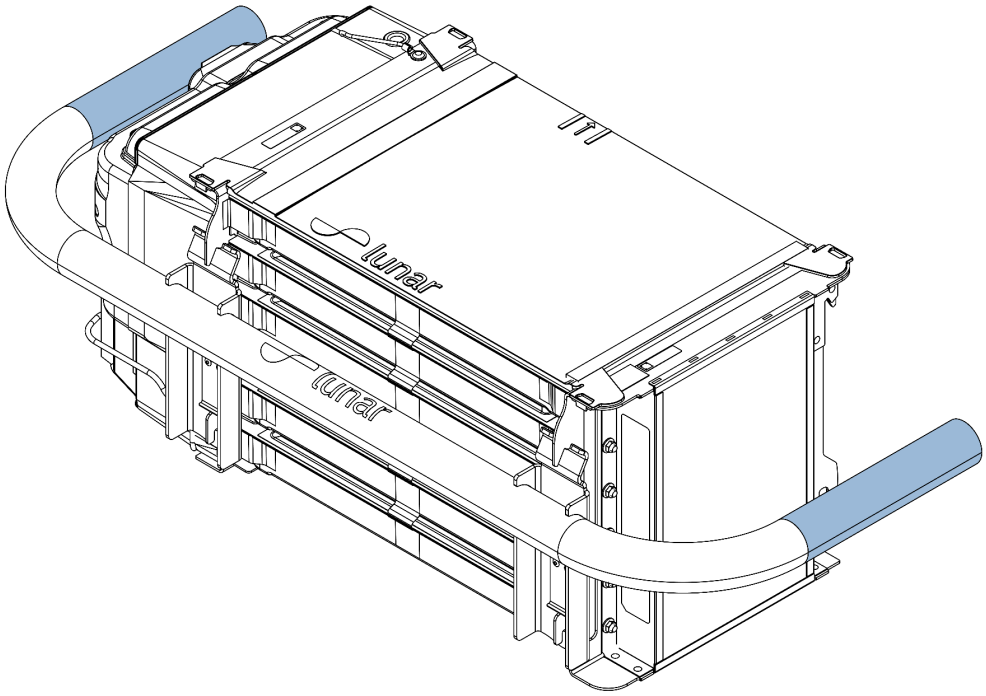

Figure 12. Lift the battery block with two people, positioning one person on each side of the lifting tool as shown in the image.

3. Using the Battery Lifting Tool, insert the Battery Block into the bottom battery wall bracket. Each Battery Block engages self-aligning clips in the bracket at 4 points. Use the alignment features on the top of the Battery Block to identify the center point on the wall bracket.

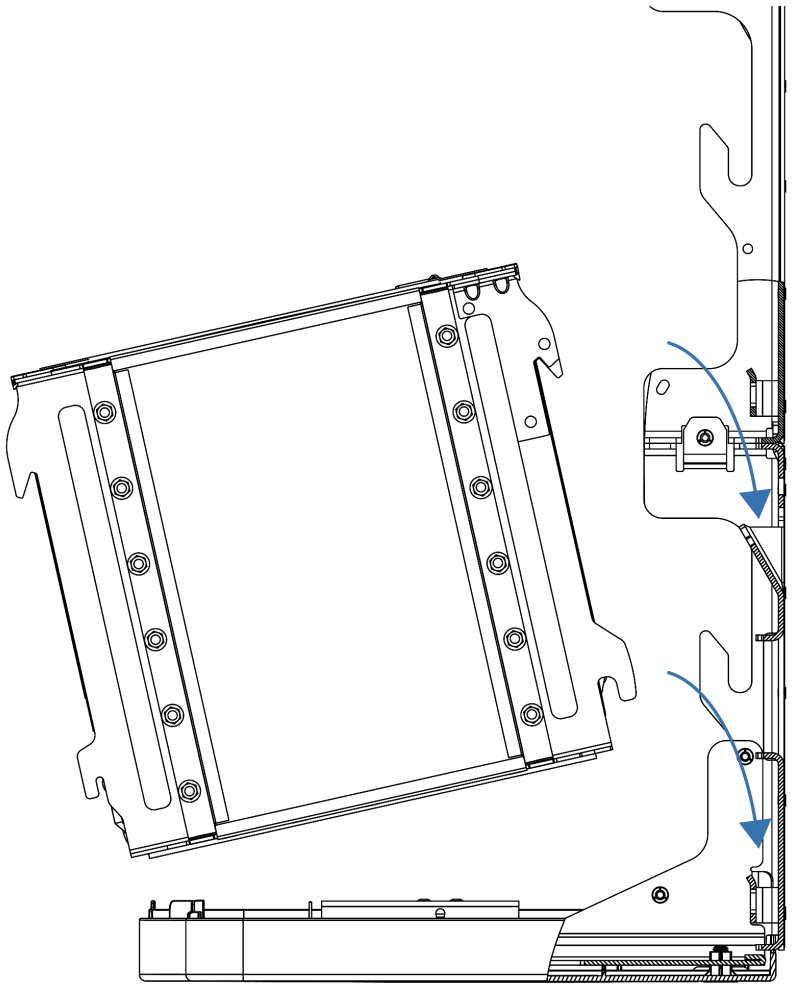

Figure 13. Installing a Battery Block in a Battery Block bracket.

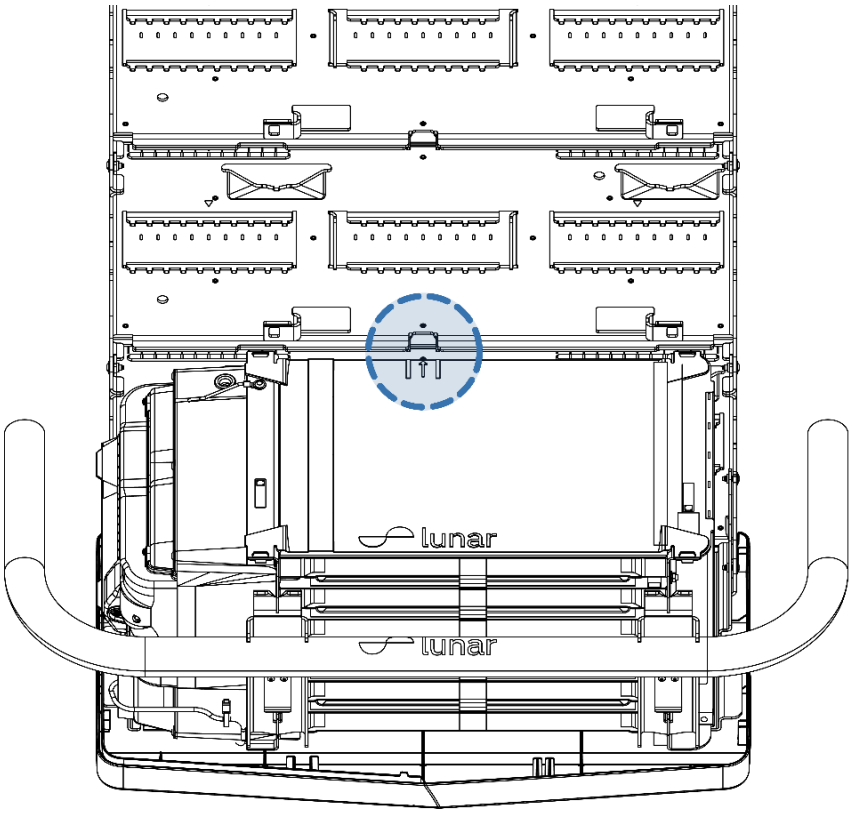

Figure 14. Installing a Battery Block in a Battery Block wall bracket.

4. Observe the 4x Battery Block frame hooks engaging with the wall bracket.
5. Disengage the Lunar Installation Tool from the Battery Block by pushing down on the lifting tool.
6. Repeat steps 1–3 for each successive Battery Block, working from the bottom to top of the system.

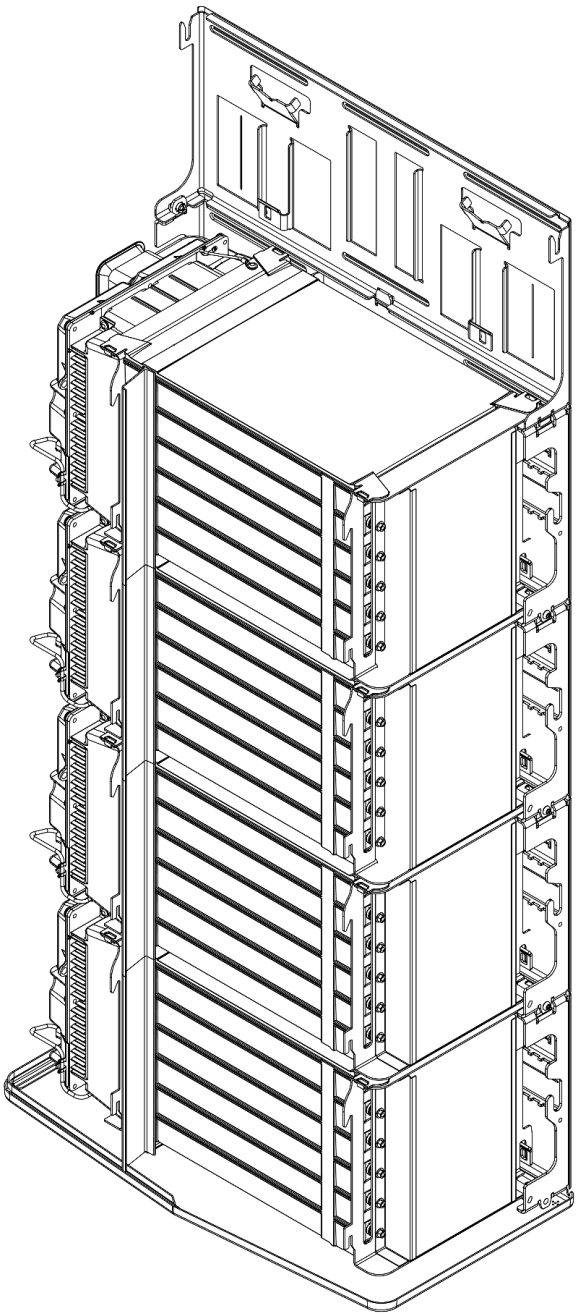

Figure 15. Battery system with all the Battery Blocks installed.

Install the Inverter

It is recommended to install the Inverter after all Battery Blocks are in place. However, if the Inverter is already mounted, the Battery Blocks can still be installed or removed without issue. Note that the Inverter installation does not require the Lunar Installation Tool.

NOTE: To avoid debris falling into the inverter fan, leave the inverter off the wall when drilling adjacent holes.

NOTE: Pour éviter que des débris ne tombent dans le ventilateur de l'onduleur, laissez l'onduleur hors du mur lorsque vous percez des trous adjacents.

1. Remove the inverter from its box.
2. Install the inverter onto the inverter bracket in the same manner as the Battery Blocks, with 4 hooks engaging from the inverter onto the wall bracket.

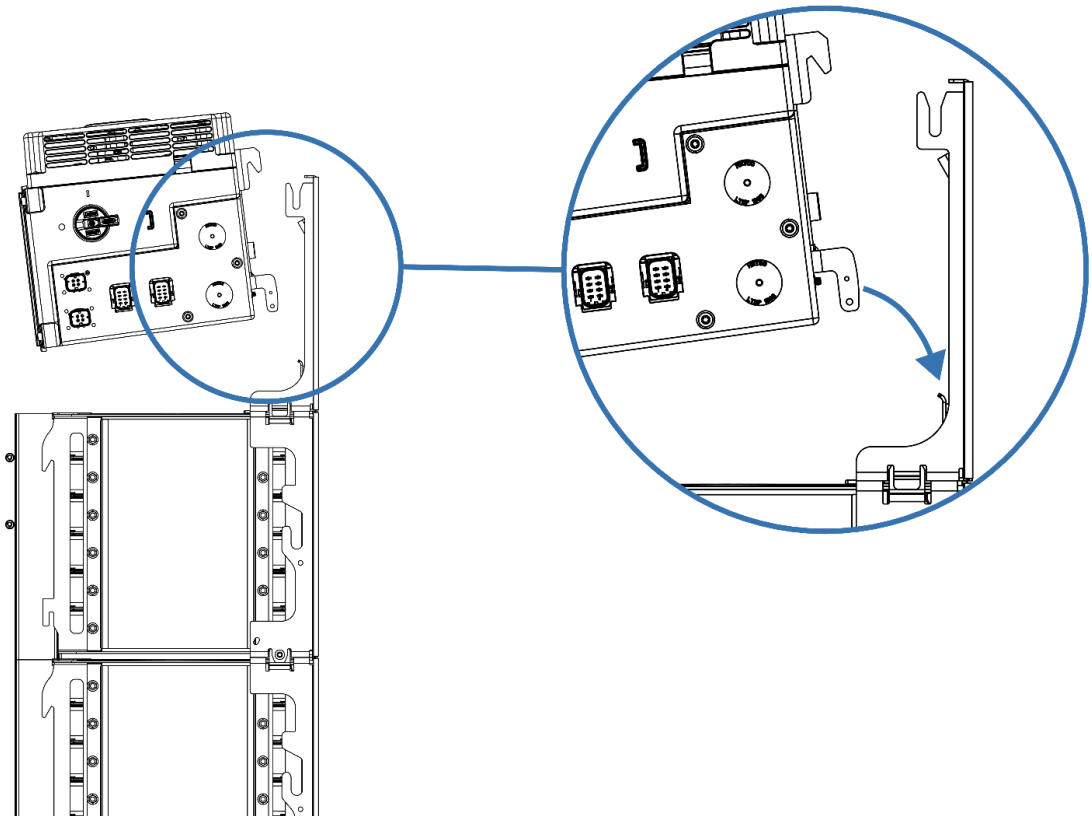

Figure 16. Installing the Inverter in the Inverter Bracket.

Wire the Inverter

A. Open the Inverter wiring compartment cover

1. Open the Inverter wiring compartment cover by loosening the three captive hex head fasteners. The wiring cover is hinged, such that it is still attached to the inverter once all fasteners are removed.
2. (Optional) You can remove the wiring compartment cover
    a. The door capacitors are electrically connected to the system via a cable and connector. The connector can be removed or re-installed when the system is de-energized.
    b. Lift the door vertical to slide it off of its hinge.

⚠ **CAUTION**: If the inverter was previously wired, de-energize the inverter before entering by turning off the Inverter's AC breaker and rotating the Inverter's integrated DC disconnect to the off position.

✓ **NOTE**: The Inverter wiring compartment door includes factory integrated capacitors.

⚠ **ATTENTION**: Si l'onduleur a déjà été câblé, mettez-le hors tension avant d'entrer en éteignant le disjoncteur CA de l'onduleur et en tournant le sectionneur CC intégré de l'onduleur en position d'arrêt.

✓ **NOTE**: La porte du compartiment de câblage de l'onduleur comprend des condensateurs intégrés en usine.

B. Install Conduit

The Inverter has four separate conduit entry points (2 on each side) to allow for DC power, AC power, communication, and/or ethernet connections. All conduit entry points are sized for ¾” trade size, but can be field modified to 1” trade size using a knockout punch tool. Affix conduit hubs to the entry points, and run conduit as appropriate for system connections.

Important: When planning your EMT conduit installation into the Lunar Inverter, ensure a minimum of 4” of straight EMT conduit into the inverter. This length is necessary to clear the Lunar System aesthetic covers.

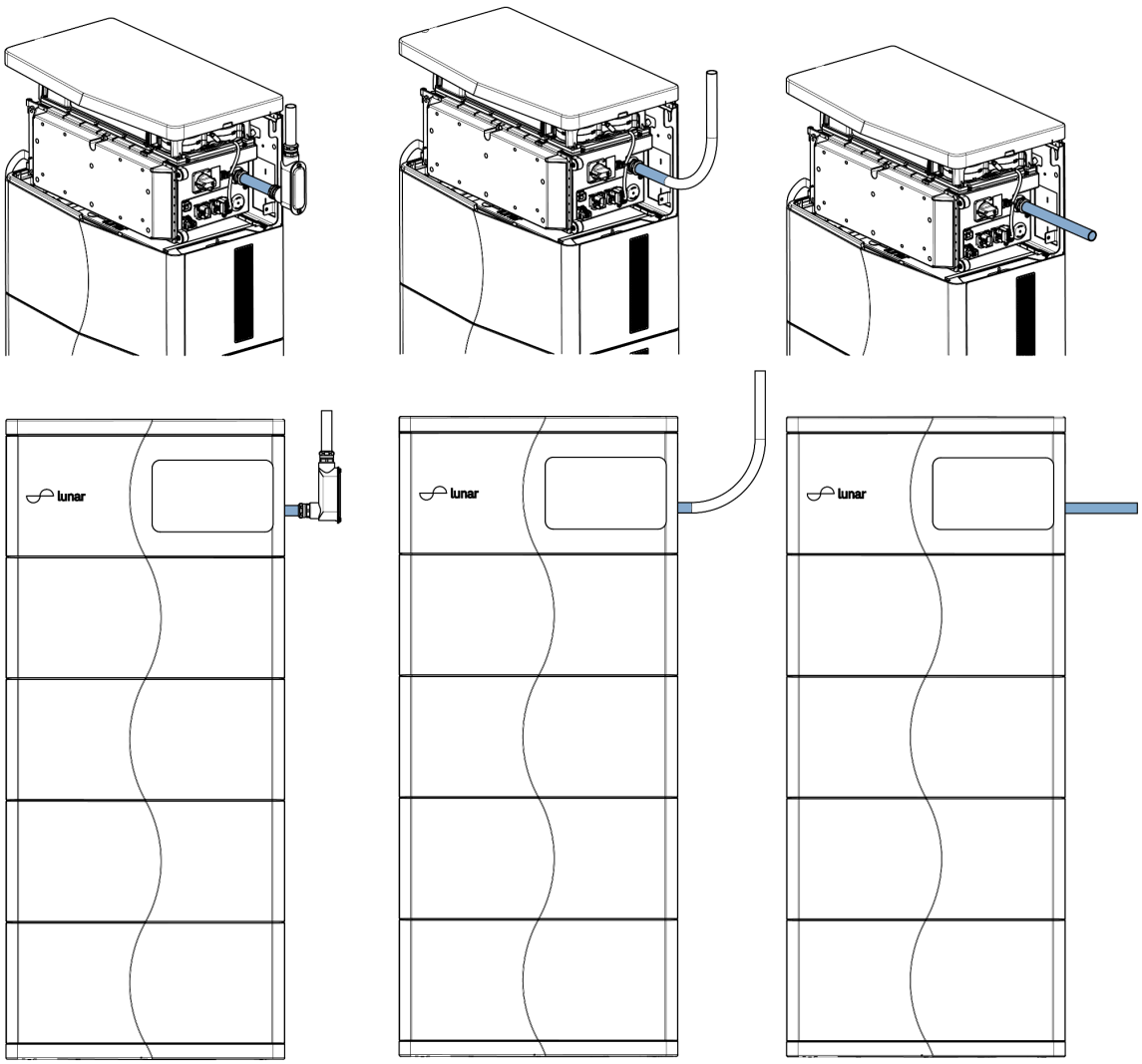

Figure 17. Image shown highlighting 4” of exposed conduit into the inverter for different installation scenarios.

Note: all conduit must be metal with UL 514B electrical conduit, fittings, and adapters of sufficient water ingress rating.

When installing rigid metal conduit (RMC) with a hub to the inverter, first attach the hub to the RMC before securing the hub to the inverter's enclosure.

NOTE: For installing hidden conduit into the wall, a 90 degree Pull Elbow must be installed on the inverter. This hides conduit between the inverter enclosure and the inverter aesthetic cover. A hole drilled through the thin sheet metal of the inverter bracket is required.

NOTE: Pour installer un conduit caché dans le mur, un coude à tirer à 90 degrés doit être installé sur l'onduleur. Cela masque le conduit entre le boîtier de l'onduleur et le couvercle esthétique de l'onduleur. Un trou percé dans la fine tôle du support de l'onduleur est nécessaire.

C. Power Wiring

A. Install the Ground conductor.

B. **PV**

Install the 12 AWG - 4 AWG, 90°C copper wire, PV DC circuit(s) from the Inverter to the Maximizer Hub.

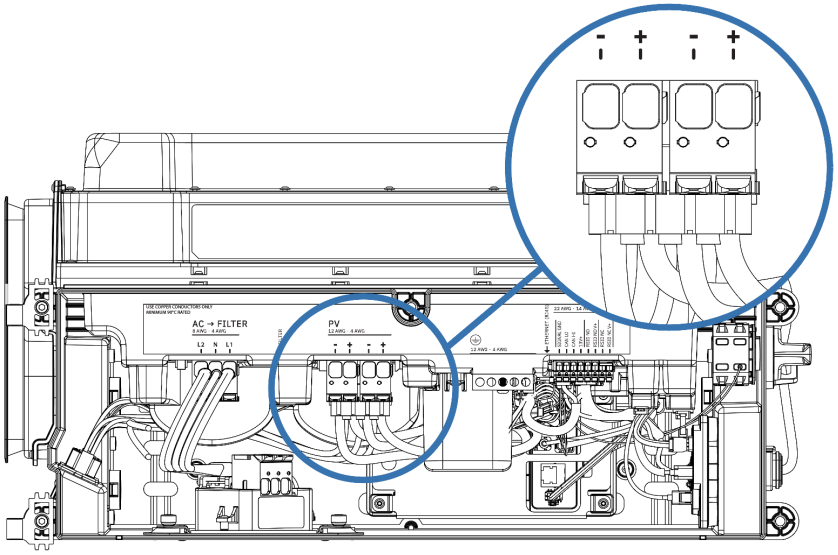

Figure 18. Install 12 AWG - 4WG wires

C. **AC Breaker**

Install 8 AWG to 4 AWG, 90°C copper wire from the 50A inverter breaker located in the Bridge to the AC circuit termination lever locks on the inverter.

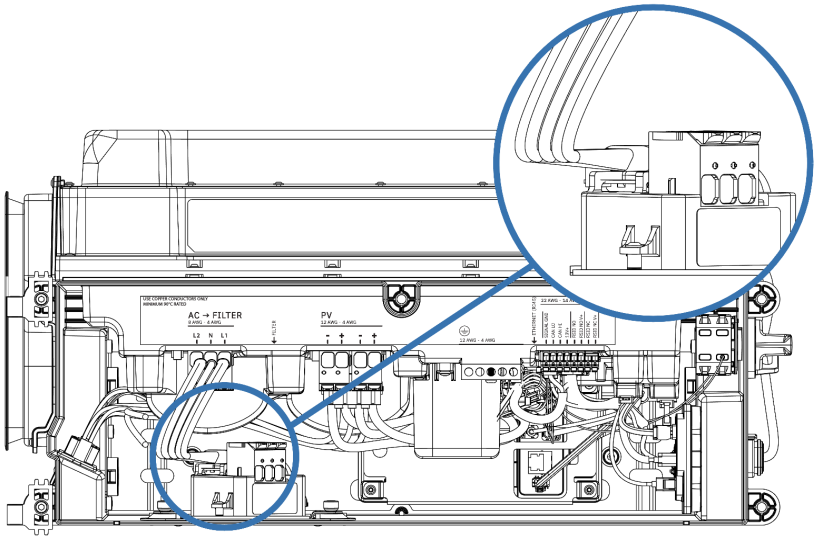

Figure 19. Install 12 AWG - 4WG wires

D. *Optional*: *Temporarily Removing the AC Filter Module*

To improve access and provide more hand space, the AC filter module can be temporarily removed from the inverter. Ensure the filter module is reinstalled before energizing the inverter. Additionally, all field-installed wires running between the 50A breaker and the inverter must be connected to the terminals on this AC filter module.

Note: The field-installed AC terminal connections are located on a separate module within the inverter compartment.

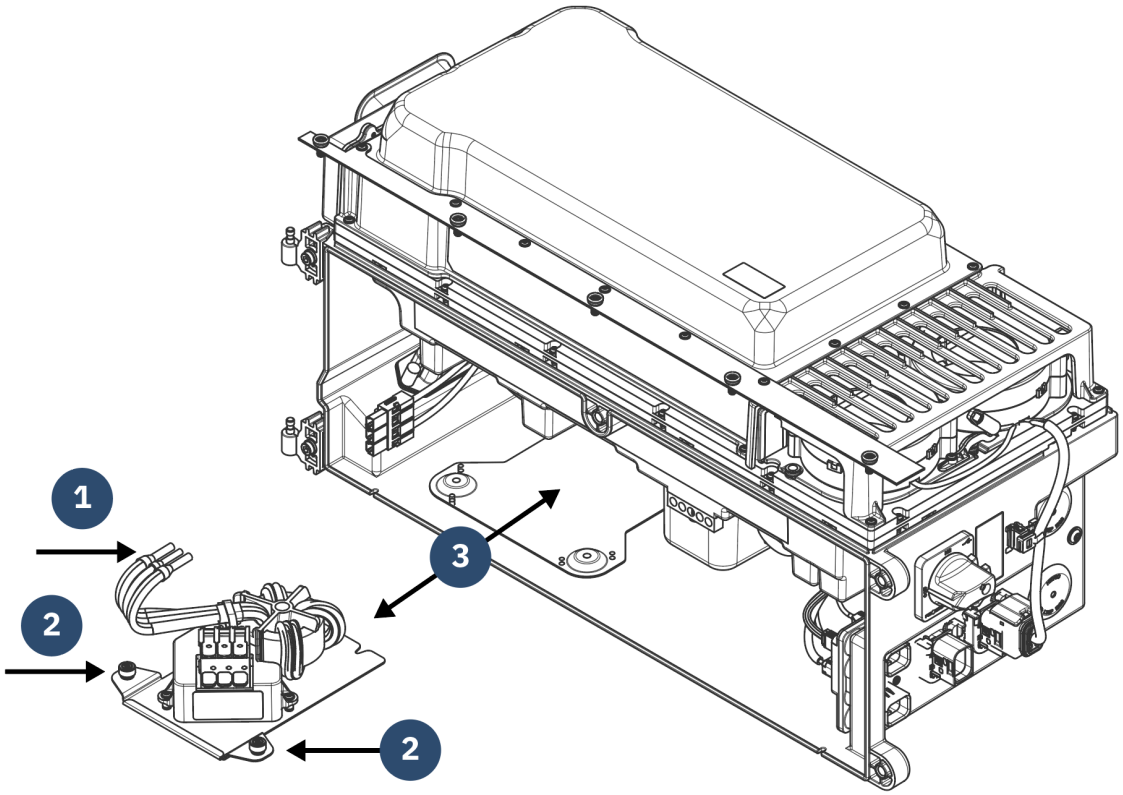

Figure 20. Removing the AC Filter Module

To remove and re-install the AC filter module, follow these steps:

1. Open/close orange levers at the top to release/terminate the wires between the inverter and the filter module.
2. Loosen/tighten the 2 thumb screws.
3. Slide AC Filter Module out/in.

E. Communication Wiring

Install the 4 low voltage wires (13V, CAN Hi, CAN Low, & Signal Gnd) between the Inverter and the Bridge.

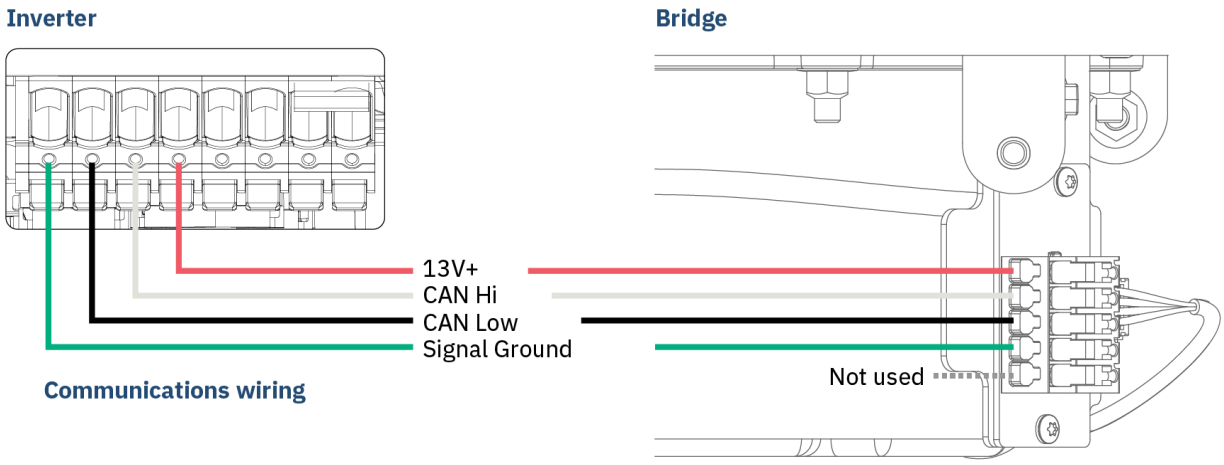

Figure 21. Inverter communication wiring

F. Optional: Rapid Shutdown Initiation Device (RSID)

When the Battery is installed in an approved location in accordance with NEC 690.12 or CEC 64-218, the rotary disconnect switch on the ESS inverter qualifies as a certified Rapid Shutdown Initiation Device.

Optionally, a field-wired Auxiliary Rapid Shutdown Initiation Device can be installed where required or where desired. This is applicable when the Battery is installed indoors in order to comply with NEC 690.12 or CEC 64-218 requirements for Rapid Shutdown Initiation outside the building.

The optional field installed Rapid Shutdown Initiation Device is provided by the Installer. The Lunar System requires a switch or button that utilizes both a Normally Closed and a Normally Open contact. This is a double fault tolerant system for initiating Rapid Shutdown.

Wire the switch/button to the 4 RSID terminals on the inverter with 22-14 AWG wires. The Normally Closed (NC) and Normally Open (NO) terminals are labeled on the Inverter. During Commissioning follow the prompts in the Install App to verify the wiring is correct.

Lunar PVRSS includes the Lunar Maximizers in conjunction with the Lunar Battery and must be installed according to their respective Installation Manuals. See Lunar Maximizer installation manual

for additional requirements. When Rapid Shutdown is initiated, conductors will be controlled both inside the array and outside the array. The Installer can view DC voltage within the Install App or using a multimeter to confirm that DC voltage is reduced to 30V within 30 seconds.

The rotary switch on the ESS inverter is factory labeled as the Rapid Shutdown Initiation Device as well as ON/OFF indication per NEC 690.12 or CEC 64-218.

The Installer is responsible to apply equivalent labeling when the field installed Auxiliary Rapid Shutdown Initiation Device is used.

Additionally, the Installer is responsible to apply other NEC 690.12 or CEC 64-218 required labeling at the service equipment location.

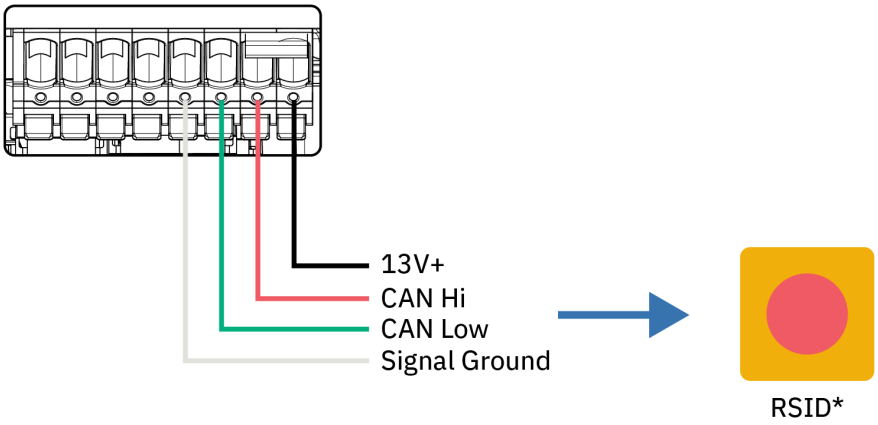

Fig 22. Optional RSID wiring termination.

⚠ **WARNING**: This Photovoltaic Rapid Shutdown System (PVRSS) incorporates one or more pieces of equipment that exercise the Rapid Shutdown Control of PV system conductors required by section 690.12 of the NEC (NFPA 70) or rule 64-218 of the CEC (CSA C22.1) . Other equipment installed in or on this PV system may adversely affect the operation of this PVRSS. It is the responsibility of the installer to ensure that the completed PV system meets the applicable Rapid Shutdown functional requirements. This equipment must be installed according to the manufacturer's installation instructions.

⚠ **AVERTISSEMENT**: Ce système d'arrêt rapide photovoltaïque (PVRSS) intègre une ou plusieurs pièces d'équipement qui exercent le contrôle d'arrêt rapide des conducteurs du système photovoltaïque requis par l'article 690.12 du NEC (NFPA 70) ou la règle 64-218 du CEC (CSA C22.1). . D'autres équipements installés dans ou sur ce système PV peuvent nuire au fonctionnement de ce PVRSS. Il est de la responsabilité de l'installateur de s'assurer que le système photovoltaïque terminé répond aux exigences fonctionnelles d'arrêt rapide applicables. Cet équipement doit être installé selon les instructions d'installation du fabricant.

G. Inverter Wiring Cover

After you are finished wiring the inverter, install the Inverter wiring compartment cover.

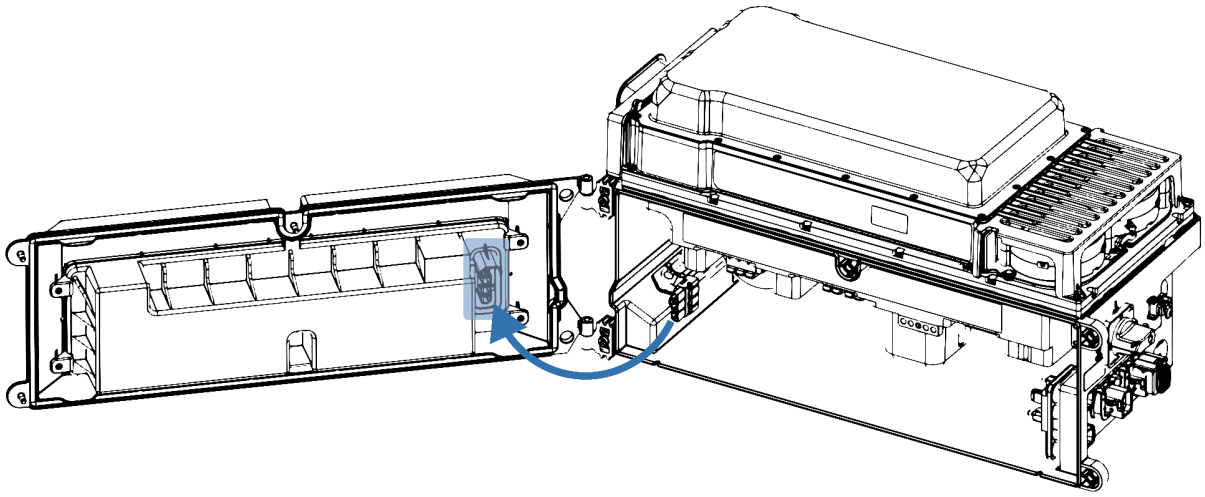

Figure 23. Ensure the Inverter door is properly connected to the Inverter.

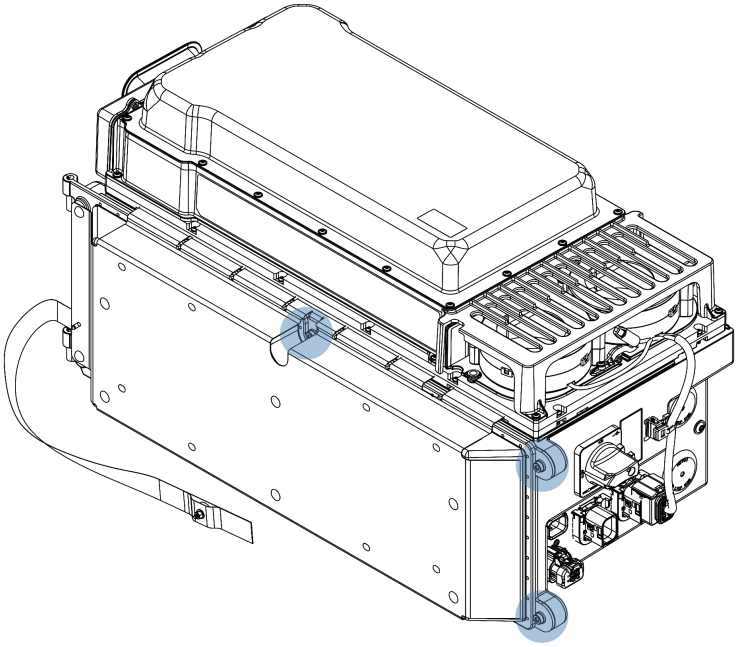

Figure 24. Screw the Inverter door closed.

⚠ **CAUTION**: The Inverter wiring compartment cover includes factory integrated capacitors. Only connect/disconnect the wired capacitor connector when the system is de-energized.

⚠ **ATTENTION**: Le couvercle du compartiment de câblage de l'onduleur comprend des condensateurs intégrés en usine. Connectez/déconnectez le connecteur du condensateur câblé uniquement lorsque le système est hors tension.

Connecting the Trunk Harness

The Battery Trunk Harness connects the Inverter and the Battery Blocks.

Connecting the Trunk Harness to the Inverter

1. Locate the Battery Trunk Harness in the hardware kit.
2. Attach the 16 pin connector on the harness to the inverter
3. Push in the connector as far as it goes.
4. Push up/in the connector position assurance white tab on the connector. The white tab will only move up and audibly ‘click’ when the connector is fully seated.

NOTE: To uninstall the connector, push the Connector Position Assurance white tab down (away from the inverter). Then depress the black tab on the connector while pulling the connector away from the inverter.

NOTE: Whether during initial install or service visits, whenever using the Inverter side connector on the Trunk Harness, verify that the Connector Position Assurance white tab on the connector works properly.

NOTE: Pour désinstaller le connecteur, poussez la languette blanche d'assurance de position du connecteur vers le bas (loin de l'onduleur). Appuyez ensuite sur la languette noire du connecteur tout en retirant le connecteur de l'onduleur.

NOTE: Que ce soit lors de l'installation initiale ou des visites d'entretien, chaque fois que vous utilisez le connecteur côté onduleur sur le faisceau de coffre, vérifiez que la languette blanche d'assurance de position du connecteur sur le connecteur fonctionne correctement.

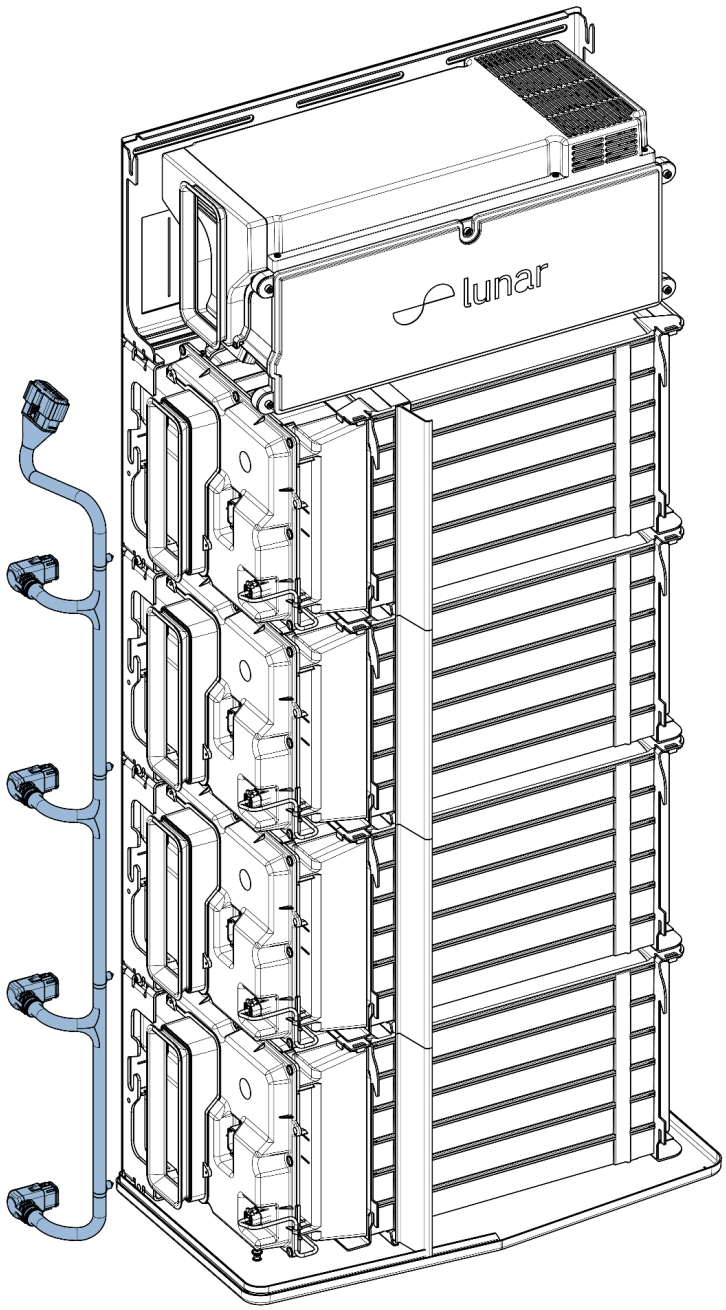

Figure 25. The placement of the Trunk Harness remains the same relative to the system for both the 20 kWh and 15 kWh models. The image shown features a 20 kWh system.

5. To verify, with the connector un-installed, slide the Connector Position Assurance white tab up and down. It should click when engaging/disengaging.
6. If the Connector Position Assurance white tab slides freely, contact Lunar for replacement.

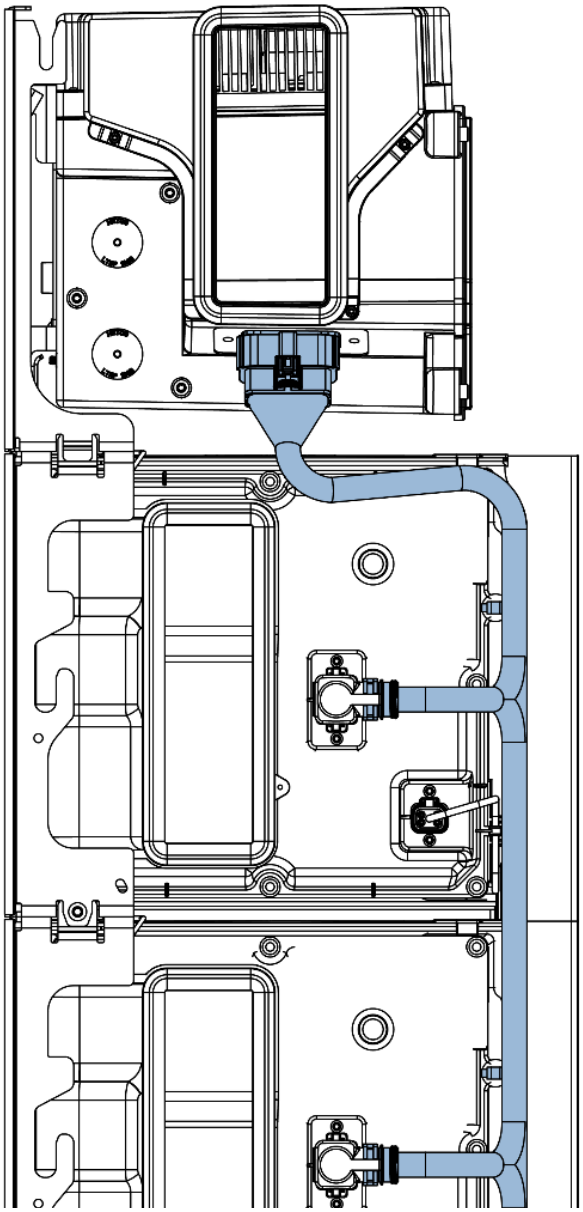

Figure 26. Connecting the Trunk Harness to the Inverter

Connecting the Trunk Harness to the Battery Blocks

1. Unscrew the hinged cap that covers each battery block plug.
2. Arrange the harness down the side of the system, and connect each Battery Block. The connectors should click into place.

> **NOTE**: Before inserting the connectors, check that the orange seal on the Trunk Harness plug is present and correctly seated in the seal groove. If any part of the seal has come out of the groove then gently re-seat it.

> **NOTE**: When inserting the connector, apply force to the black connector housing. Do not push or pull on the wires or shield.

> **NOTE**: Avant d'insérer les connecteurs, vérifiez que le joint orange sur le bouchon du faisceau de coffre est présent et correctement placé dans la rainure du joint. Si une partie du joint est sortie de la rainure, remettez-la doucement en place.

> **NOTE**: Lors de l'insertion du connecteur, appliquez une force sur le boîtier noir du connecteur. Ne poussez pas et ne tirez pas sur les fils ou le blindage.

3. For each Battery Block plug, close the hinged cap and fasten the M5 screw. Torque to 3.0 N-m.

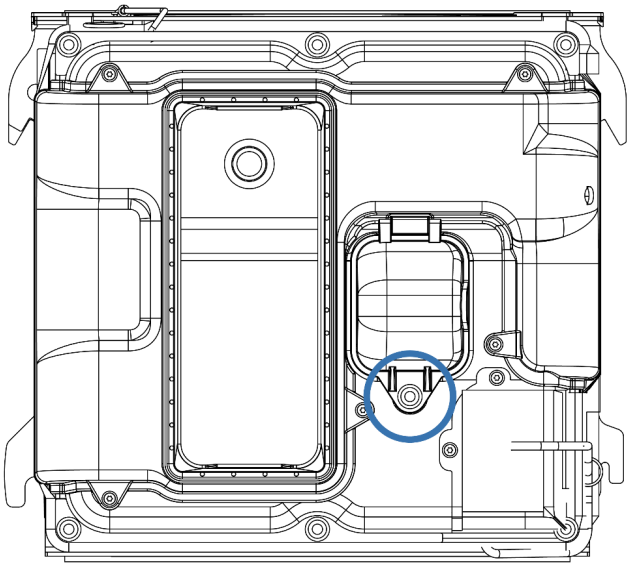

Fig 27. Battery Block hinged cap close with screw.

4. Anchor the Trunk Harness to the Battery Blocks by pressing the push in Fir Trees on the Trunk Harness into the corresponding receptacles in each of the Battery Blocks.

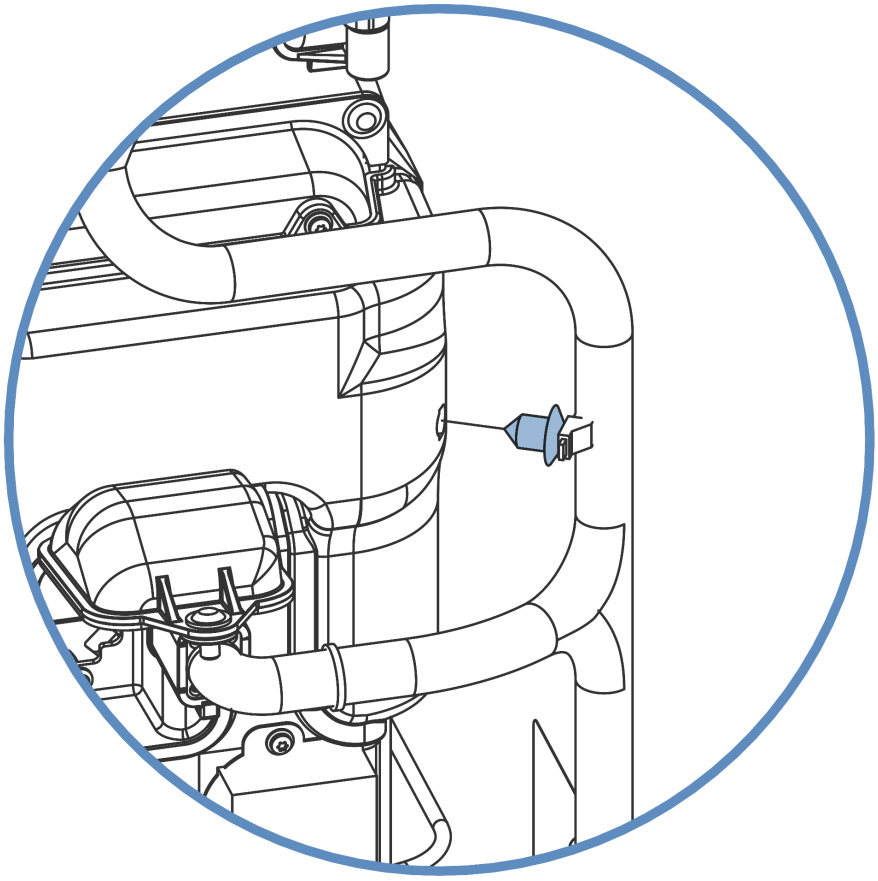

Figure 28. Fir tree clip attachment point.

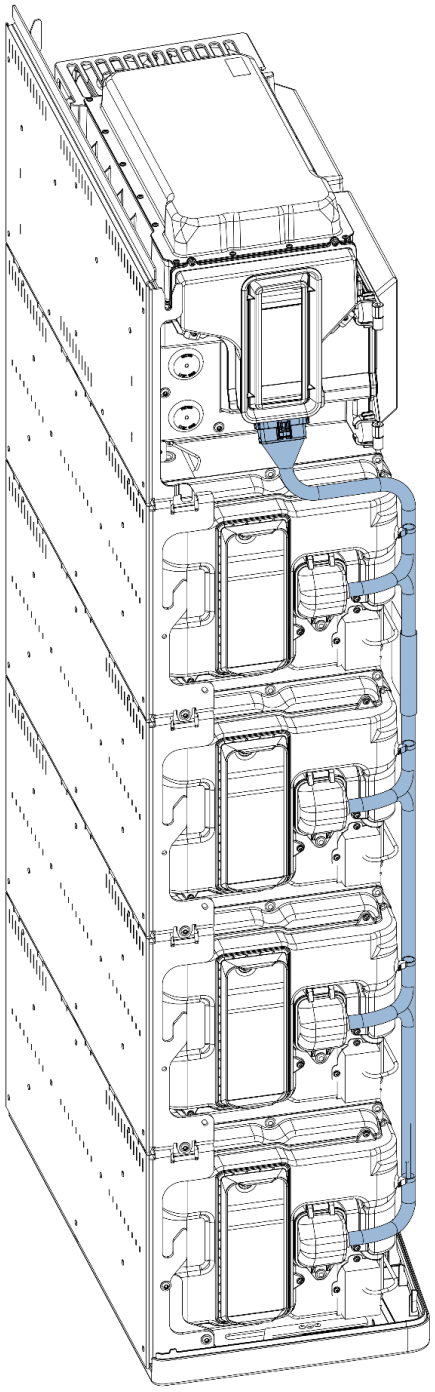

Figure 29. Trunk harness assembled on a 20 kWh system.

Install the Inverter EMC Components

A. Apply conductive tape to AC & DC Conduit Connectors

Apply a single piece of conductive tape, approximately 7” long (supplied in the inverter box), to each of the AC and DC conduit connectors at the following locations:

1. Tape between conduit connector and wall bracket with 2-3” of tape on the wall bracket.

   Important: When installing both AC and DC conduits on the left side and right side of the inverter, you must apply EMC tape to both sides. Please note that the image below illustrates only the left-side entry as an example.

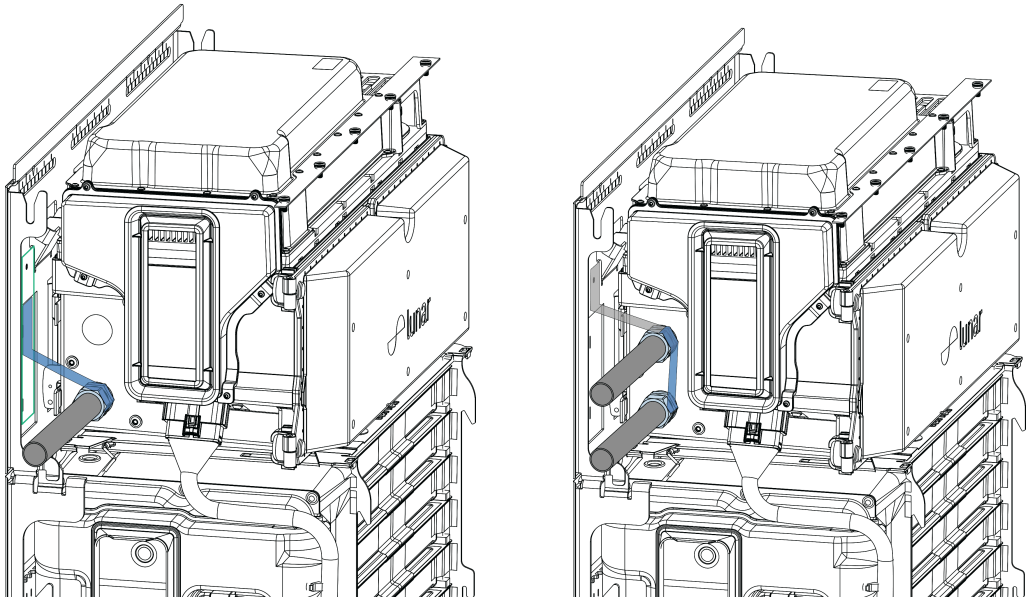

Figure 30. EMC tape on wall bracket and conduit connector.

NOTE: The tape should only touch the conduit fitting, and not the conduit, otherwise it will interfere with the Bug Barriers.

NOTE: Le ruban adhésif ne doit toucher que le raccord du conduit, et non le conduit, sinon il interférera avec les barrières anti-insectes.

NOTE: Assurez-vous que le ruban adhésif sur le côté droit du bloc de batterie supérieur n'obstrue pas la ventilation.

B. Inverter Door Magnet Strap

a. Connect the Inverter door magnet strap to the top Battery Block.

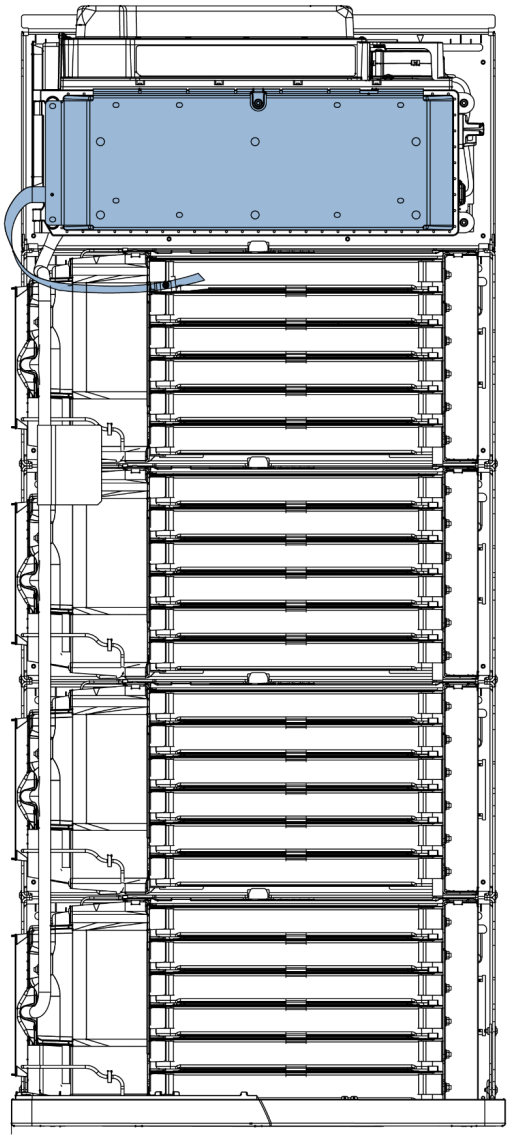

Figure 31. Inverter door magnet strap attached to Battery Block.

Install the Aesthetic Covers

Install the Battery Block and Inverter aesthetic covers from bottom to top, starting with the first Battery cover.
Note: All the Battery Block aesthetic covers are identical, and can be installed upside down.

1. Remove the protective film on the Battery Block and Inverter aesthetic covers.
2. Orient the first battery cover so that its bottom reveal flange is on the opposite side of the corresponding reveal flange on the front of the Bottom Cover. Orientation of the ball stud and ball stud receiver on the covers can also guide orientation.
3. Slide the cover into place so that the posts on each side of the cover engage the hooks on the wall bracket, and the ball studs and holes engage the corresponding ball studs and holes on each side of the Bottom Cover.

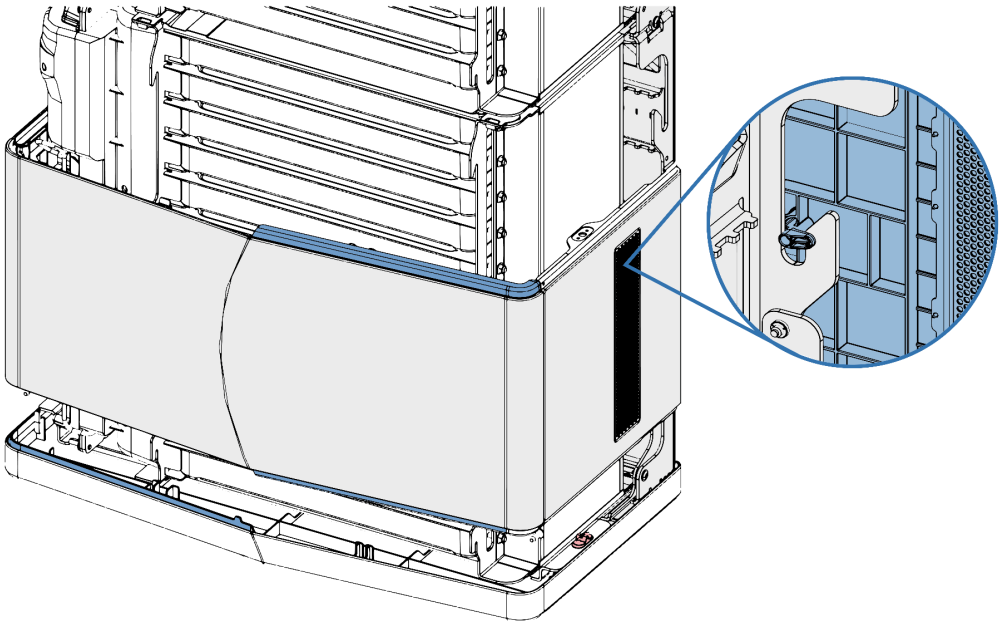

Figure 32. Orientation of bottom aesthetic cover.

✓ **NOTE**: For each cover installation, check that the Battery Block Cover posts are engaged with the hooks on both sides of each wall bracket.
✓ **NOTE**: For each cover installation, check that the ball stud and receiver are fully engaged between all covers.
✓ **NOTE**: Pour chaque installation du couvercle, vérifiez que les poteaux du couvercle du bloc de batterie sont engagés dans les crochets des deux côtés de chaque support mural.
✓ **NOTE**: Pour chaque installation de couvercle, vérifiez que la rotule et le récepteur sont complètement engagés entre tous les couvercles.

4. Repeat Step 2 for the remaining Battery Block covers, alternating the reveal, and connecting to the Batty Block cover below it.

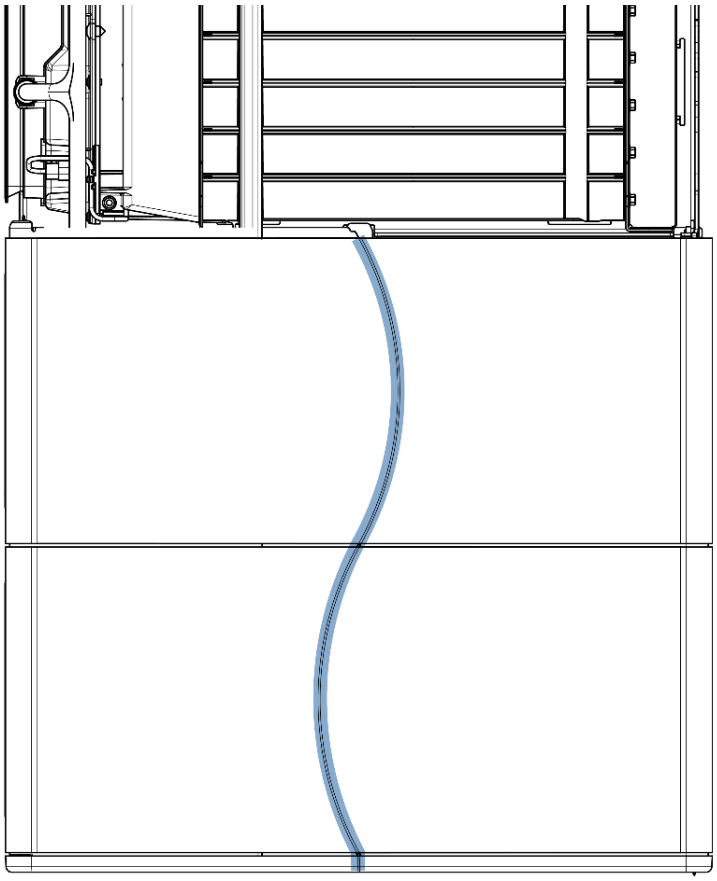

Figure 33. Orientation of second battery aesthetic cover.

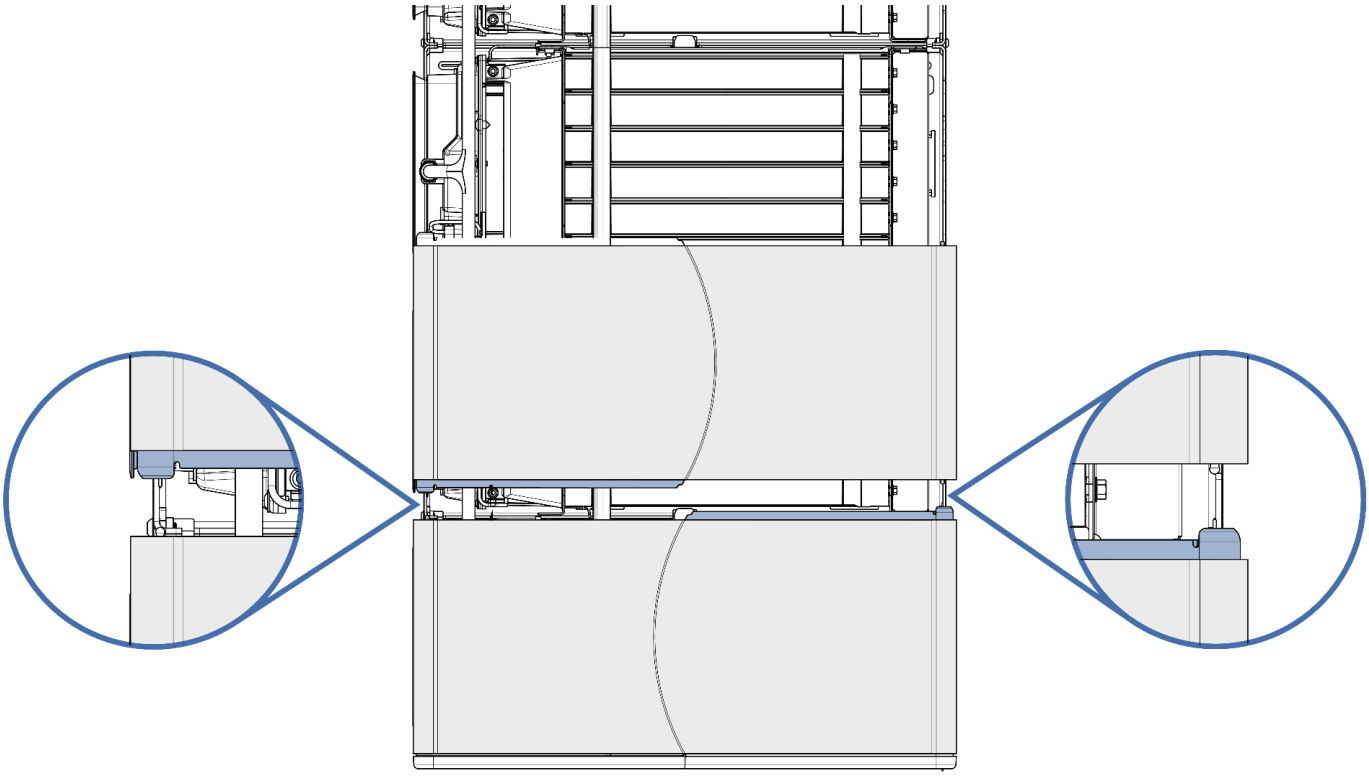

Figure 34. Ball stud and receiver between Battery Block covers.

5. Locate and install the Inverter aesthetic cover over the Inverter, following the same process as the Batter Block covers for reveal and ball studs.

> ✓ NOTE: To manage the antenna and LED connectors on the inverter cover, it is recommended to hang these wires out the side access door. This keeps the wires out of the way when installing the inverter cover.

> ✓ NOTE: Pour gérer les connecteurs d'antenne et de LED sur le couvercle de l'onduleur, il est recommandé de suspendre ces fils par la porte d'accès latérale. Cela permet de garder les fils à l'écart lors de l'installation du couvercle de l'onduleur.

6. Install the inverter Top Cover by engaging the ball studs to mating receiver on the inverter cover.

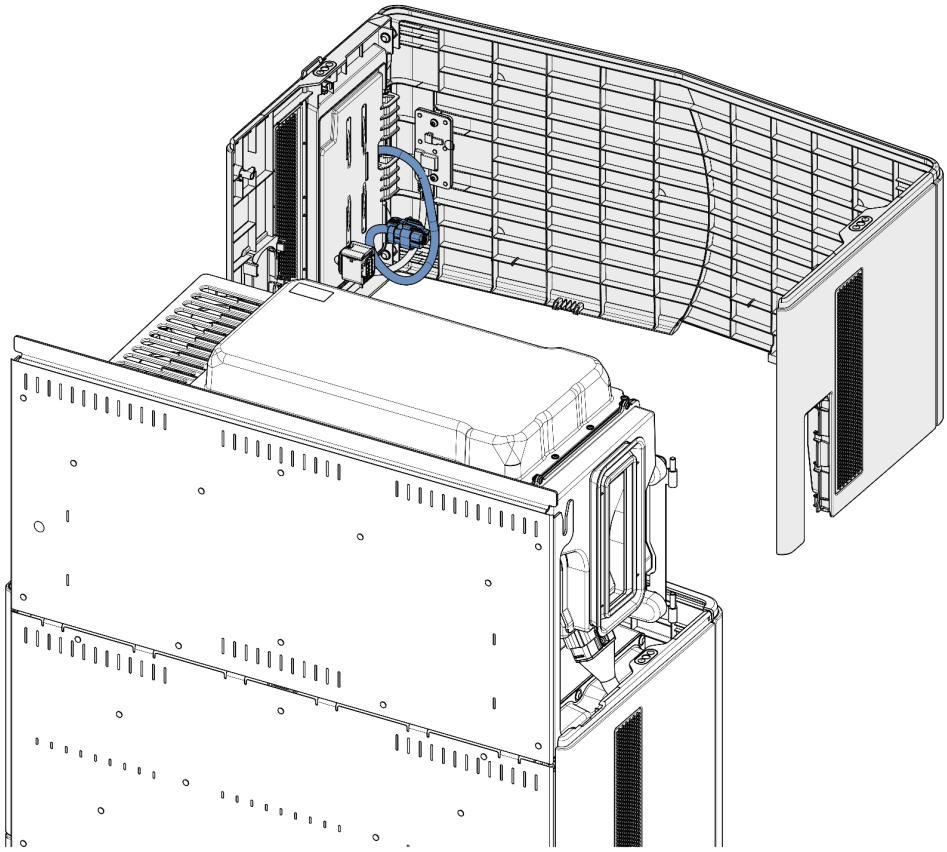

Figure 35. Installing the Inverter aesthetic cover.

Connect the Antenna & LED

The antenna & LED come factory installed on the Inverter Aesthetic cover.

1. Plug in the teal antenna connector.
    a. Push in the connector, then push in the red position assurance tab.
2. Plug in the LED connector.
    a. Ensure the yellow slider on the connector is in the up position
    b. Push in the connector to the LED terminal port.
    c. Close the yellow slider by pushing down on the connector.

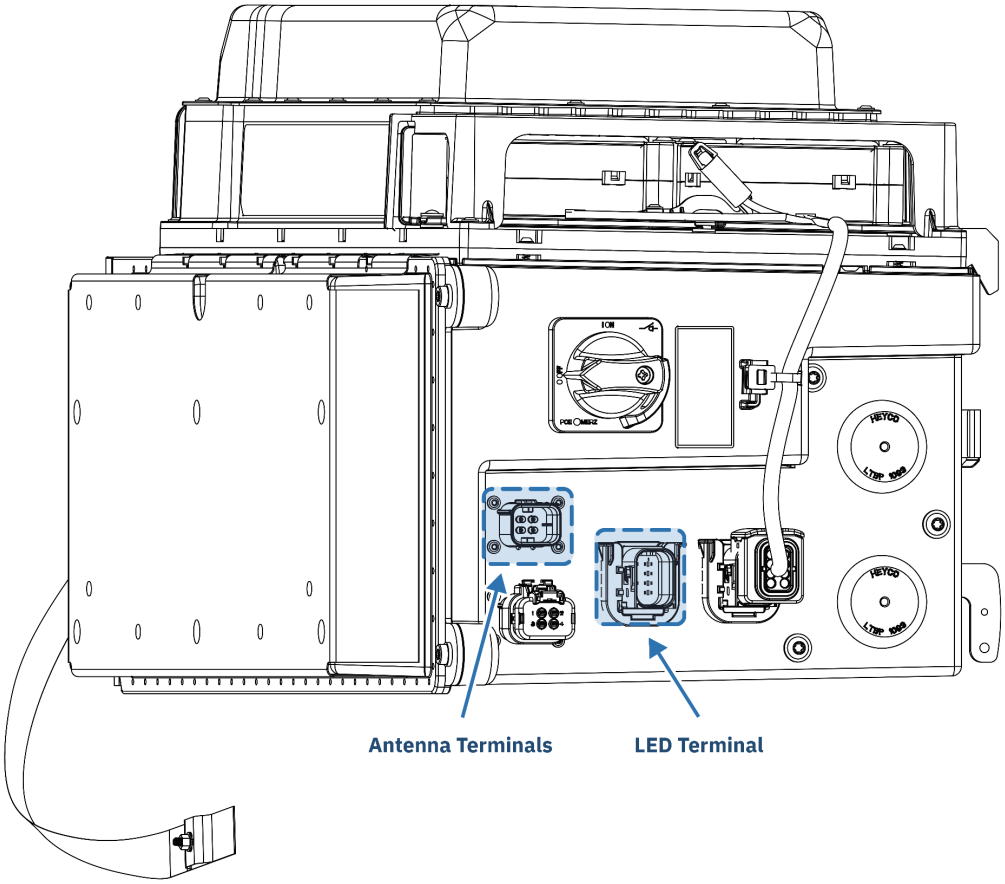

Figure 36. Inverter antenna & LED terminals.

Install the Bug Barriers on the Conduit

Any connected inverter conduit passing through the inverter aesthetic cover must have the Lunar supplied Bug Barrier installed on it.

1. Locate the Bug Barriers and the Conduit Covers in the Hardware Kit
2. Seat the Bug Barriers onto the conduit by opening the slit in the plastic

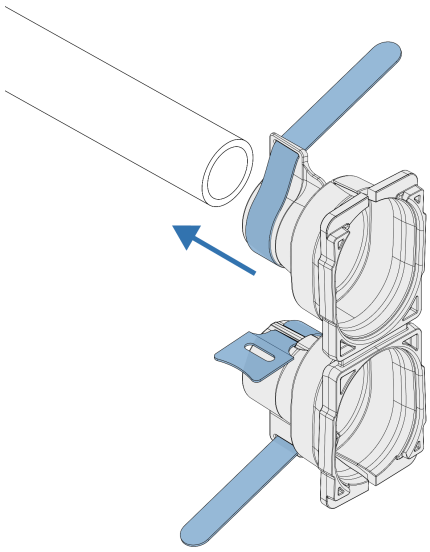

3. Secure the hook and loop straps.

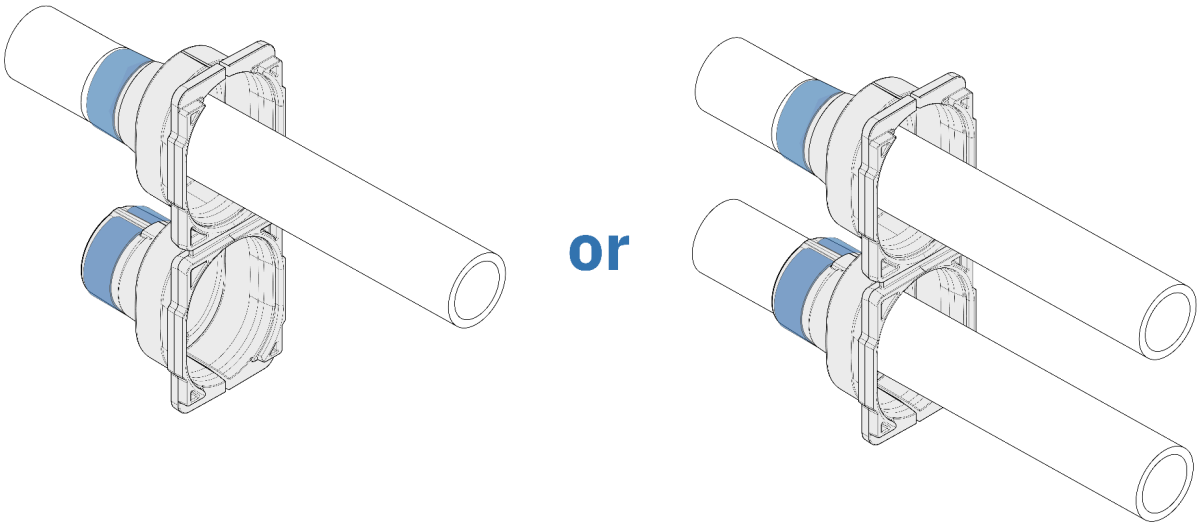

✓ **NOTE**: The intended installation position is snug, but not too tight. The Bug Barriers need to slide along the conduit, yet minimize gaps so bugs keep out.

4. Slide the bug barriers towards the inverter.

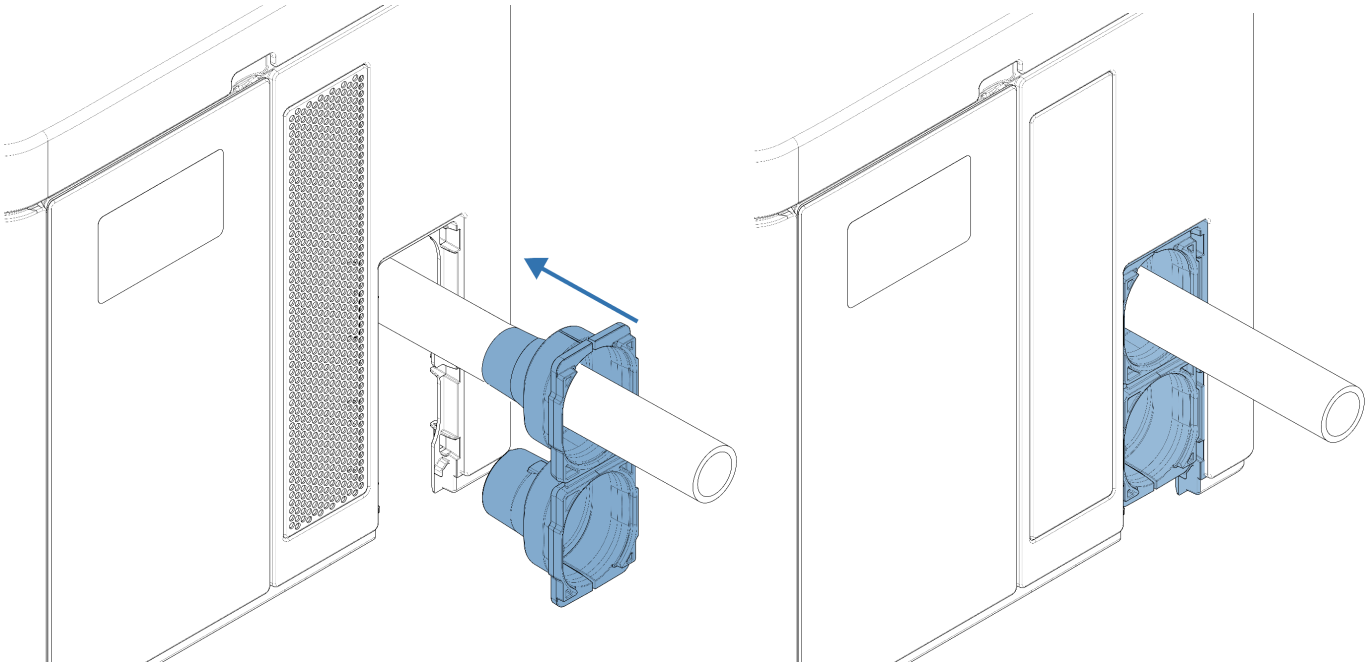

5. Install the specific conduit covers based on how many conduits are installed on each side.
    a. 6 sets of conduit covers are provided. Mix and match these as needed to cover each side.
    b. Note that the difference between the left and right side covers is the removable gap cover required at the bottom of the right side.

Conduit Cover

Each Lunar System includes conduit covers, which can be found in a separate box within the Hardware Kit.

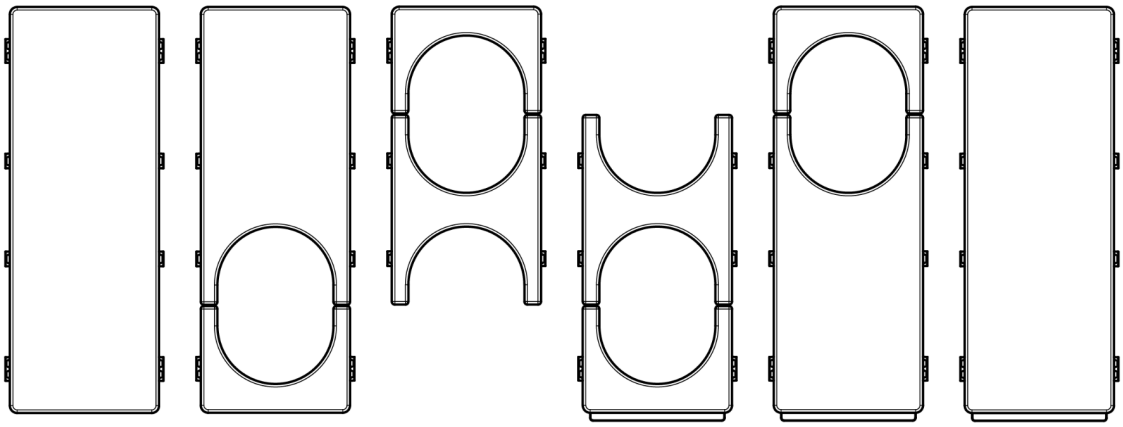

1. Install the appropriate conduit covers on the left side of the inverter.

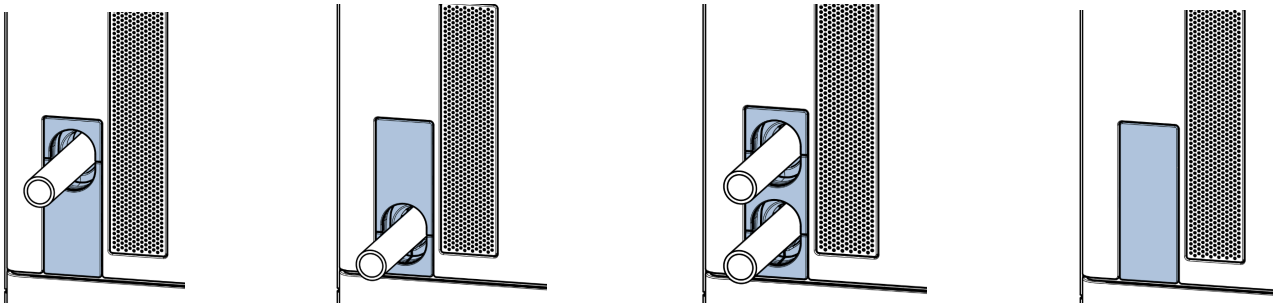

2. Install the appropriate conduit covers on the right side of the inverter. The right-side covers include a removable gap cover.

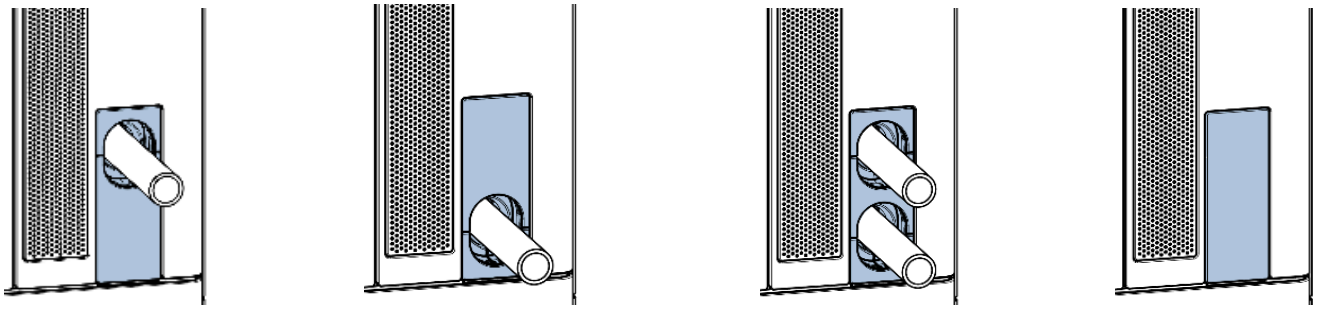

Commission the Lunar System

To commission the Lunar System:

1. Download the “Lunar Installer” application from your device’s app store.
2. Log in using Okta or your Lunar Installer account. If using your Lunar Installer account for the first time, use the details from your “Welcome to Lunar Installer” email.
3. Tap "Create Job" from the Installer App main screen, and select "Commission System".
4. Follow the instructions in the app to connect to and commission the system. Once connected, address all blue tasks, yellow warnings, and any red faults.
5. Tap “Finish Job” once all items are addressed. The job review screen will show.
6. Tap “Submit” on the job review screen to complete commissioning and submit the Job Report to Lunar.
7. The Job Report PDF can then be viewed and shared, and will be available within Lunar Partner.

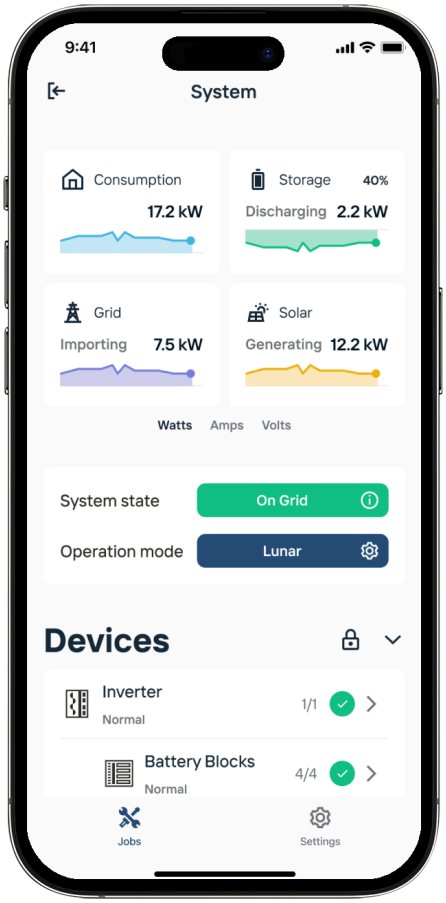

Download on the App Store

Troubleshooting

Most troubleshooting action takes place within the Installer App, which provides alerts and recommended actions. See LED indicators in the troubleshooting section of this manual for AFCI enunciation, and recommended actions for responding to Arc Fault and Ground Fault detections.

LED Indicators

The following defines the message for each LED code on the Lunar Battery aesthetic cover.

System State	LED Display	Recommended Action
On-Grid Operation	All three LEDs pulse white, with the light moving sequentially towards the right. This means that your system is actively connected to the power grid and operating normally. At night, all three LEDs will emit a dim white light that pulses every 30 seconds.	No action
Off-Grid Operation	All three LEDs pulse blue, with the light moving sequentially to the right. This indicates that the system is supplying power independently from the grid. This can occur during a power outage or when the system is intentionally set to operate off-grid. Monitor the system if you expect it to return to grid operation. No immediate action is required if the off-grid mode is intentional. At night, all three LEDs will emit a dim blue light that pulses every 30 seconds.	No action
System Fault	All three LEDs pulse orange, with the light moving sequentially to the right. This indicates that the system is in a fault condition and will not perform charge or discharge functions.	To attempt to clear the fault, initiate a Rapid Shutdown by turning the rotary switch to the OFF position. Wait for 30 seconds, then turn the rotary switch back to the ON position. If the fault persists after the reset, place the system back into Rapid Shutdown and contact your installation partner for further assistance.

Appendixes

Rogowski Coil (CTs)

Rogowski Coils are flexible, air-core sensors designed to measure alternating current (AC) by detecting the rate of change of current in a conductor. These current transformers (CTs) provide accurate, non-intrusive current measurements and transmit this telemetry to the Lunar System. The Application Note ***Rogowski Coils (CTs) for the Lunar System*** contains further information.

The integration of Rogowski Coils within the Lunar System enables the following functionalities:

- **Partial Home Backup**: Monitoring energy usage of non-backup loads connected to an upstream panelboard.
- **Power Control System (PCS)**: The Lunar System, which includes the Lunar Battery (ESS), Lunar Bridge and optional Rogowski Coils (CTs), have been certified to both UL 1741 PCS CRD and UL 3141.

> ✓ **Note**: Rogowski Coils are an optional component of the Lunar Power Control System (PCS). For more details about PCS features, refer to the '*Power Control System (PCS) Features for the Lunar System*' Application Note and '*The Lunar Battery Installation Manual*'.

A. Compatible Coils

Only install Rogowski Coils sourced directly from Lunar Energy. The Lunar System uses the Magnelab RCT-120L Series Coils. Two Rogowski Coils along with the field applied labels are included in the Rogowski Coils kit (90-06789A). The datasheet for the Magnelab RCT-120L Coil is available here.

B. Installation

Coils Installation at Main Panel

The latch end of the Coils are typically installed on the service disconnect for a residential home.

Location: The Coil must be installed on the conductors in series between the Lunar Bridge and the grid.

Clasp: Ensure the Coil clasp is fully engaged by performing a gentle tug test to confirm it is secure.

Coil Installation on Branch Circuits

When direct installation of the coils on the service disconnect conductors is not feasible – such as in cases involving 4-wire main breaker– refer to the Application Note titled ***Rogowski Coils (CTs) for the Lunar System*** for alternative guidance.

Coil Termination at the Bridge

Terminate the Coil leads to the labeled terminals Coil 1A/1B and Coil 2A/2B in the Bridge

If a drain wire is present, do not splice or connect it to any conductor or terminal.

When extending the length of the Coil free-end wires, splice the wires using 12-24 AWG shielded, twisted or untwisted wires. Note that the maximum length of spliced wire is 100 feet.

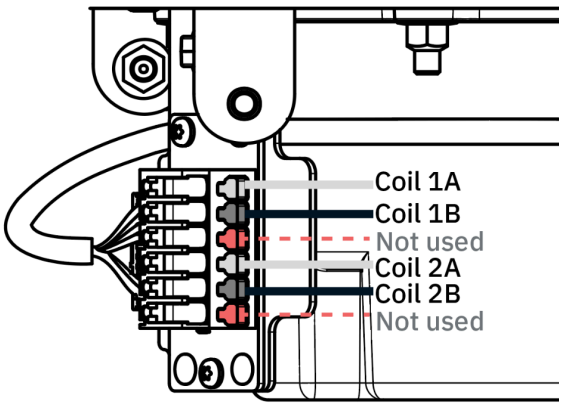

C. Coil Phase & Polarity

To verify the correct phase (L1 versus L2) and polarity (positive current vs negative current) of the Coils, please follow the guidance in the Lunar Installer App.

Adjusting Coil Phase & Polarity

The easiest method to adjust Coil phase or polarity is to adjust the wiring terminations at the Bridge, rather than adjusting the clasp end of the Coil.

Coil Phase is flipped by swapping the terminations of Coil 1A and Coil 1B with Coil 2A and Coil 2B.
Coil Polarity is flipped by swapping the terminations of Coil 1A with Coil 1B, and similarly, swapping the terminations of Coil 2A with Coil 2B.

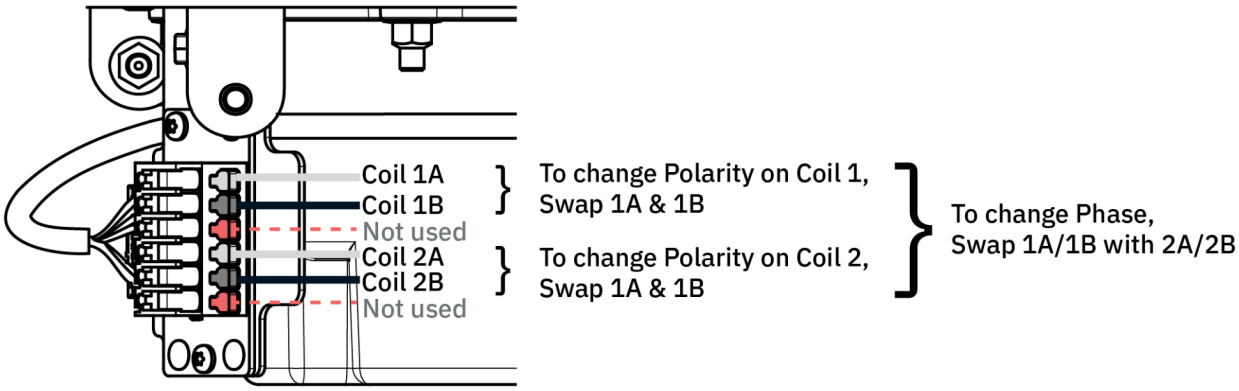

Coil Indicator Arrow and Wire Termination

Each Coil has an arrow indicator intended to point toward the load. However, in the Lunar System, the Coil arrow may be pointed in either toward the Load or to the Grid, as long as the arrow indicator directions are consistent with the coil A/B wiring terminations

Coil Arrow Direction	Wiring Terminations
Arrow points toward the Load	Black on Coil A
	White on Coil B
Arrow points toward the Grid	White on Coil A
	Black on Coil B

D. Commissioning

The Installer App uses the factory-installed Bridge Current Transformers (CTs) to compare the measured current from the Coils with that of the Bridge CTs, ensuring accurate Coil installation. This verification process requires the installer to adjust which loads are on or off in the home.

The Installer App will prompt the installer to:

1. Turn off all non-backup loads.
2. Turn on the backup loads fed from the Lunar Bridge, ensuring that the following conditions are met
    - Both AC L1 and AC L2 must have at least 2A of measured current.
    - There must be at least 2A of imbalanced current between AC L1 and AC L2 (i.e., one line must have at least 2A more measured current than the other).

The Installer App will display a green checkmark to confirm the coil installation only when all required conditions are met. If the conditions are not met, the app will prompt users with the necessary actions to ensure proper installation.

Power Control Systems (PCS)

The Lunar System, which includes the Lunar Battery (ESS), when integrated with Lunar Bridge and optional Rogowski Coils (CTs), or Meter Socket Adapter (MSA) and MSA Controller (MSA-C) complies with the requirements specified in UL 1741-CRD PCS and UL 3141 – Issue 1 standards. Lunar PCS control ensures the maximum Open Loop Response Time (OLRT) is less than two seconds; that is, if the measured current of all sources combined exceeds the configured user limit, the aggregate output of all PCS-controlled sources (PV output, battery charge and discharge) will be curtailed to zero within two seconds. PCS is relevant to Article 705, 750, and 220 of the 2020 NEC, the 2023 NEC, and the 2022 CEC.

The following features are the distinct functions of the Lunar System. Installers may select one or multiple settings based on site conditions and configurations.

- Bridge Limit
- MSA Limit
- Panel Limit at Rogowski Coils
- PCS Modes
- Export Limit from Lunar System

PCS settings are not required to be configured for a system installation; however, an installer may choose to set them in order to more easily comply with National Electrical Code requirements and/or Utility requirements.

⚠ **WARNING:** The maximum PCS operating current setting shall not exceed the busbar rating or conductor ampacity of any PCS controlled busbar or conductor.

✓ **NOTE**: The Lunar PCS is supplemental protection; therefore all PCS controlled busbars or conductors shall be protected with suitably rated overcurrent devices appropriately sized for the busbar rating or conductor ampacity. The maximum operating currents in controlled busbars or conductors are limited by the settings of the power control system and may be lower than the sum of the currents of the connected controlled power sources. The settings of the PCS controlled currents may be used for calculation of the design currents used in the relevant sections of NEC Article 690, 705, 220, 710, and elsewhere as applicable for supplemental protection.

Partial Home: Lunar Battery with Service Disconnect at Utility Meter

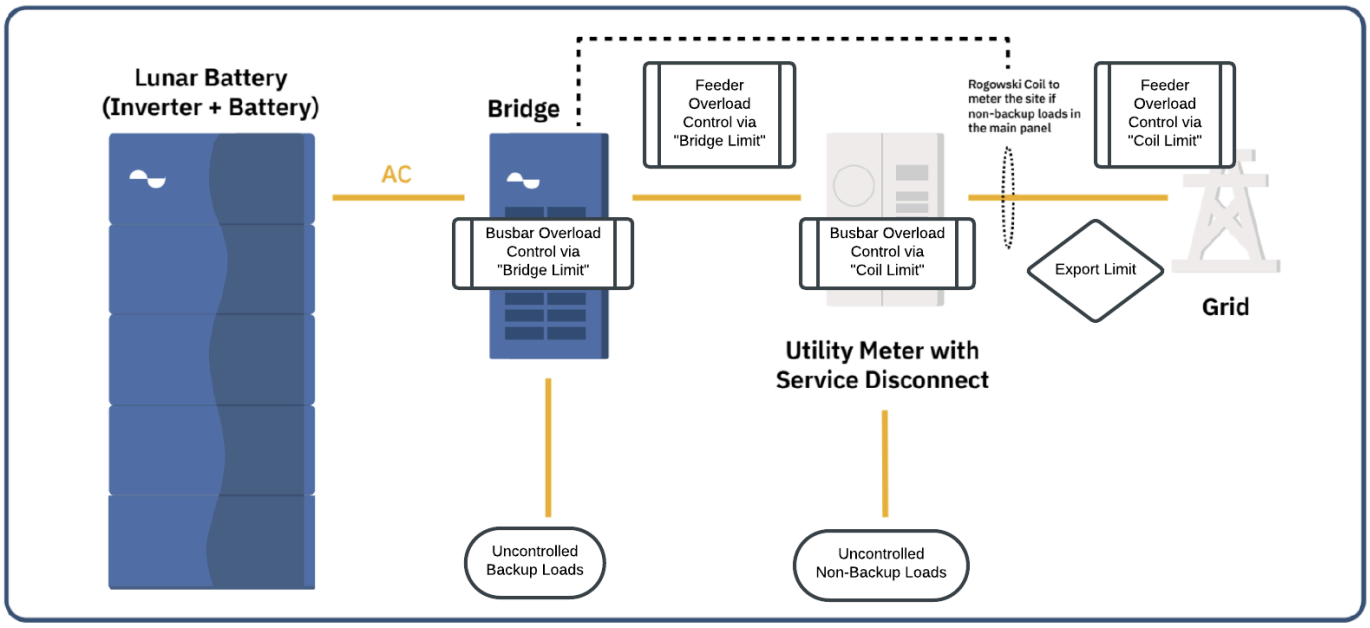

Whole Home: Lunar Battery with Service Disconnect at Lunar Bridge

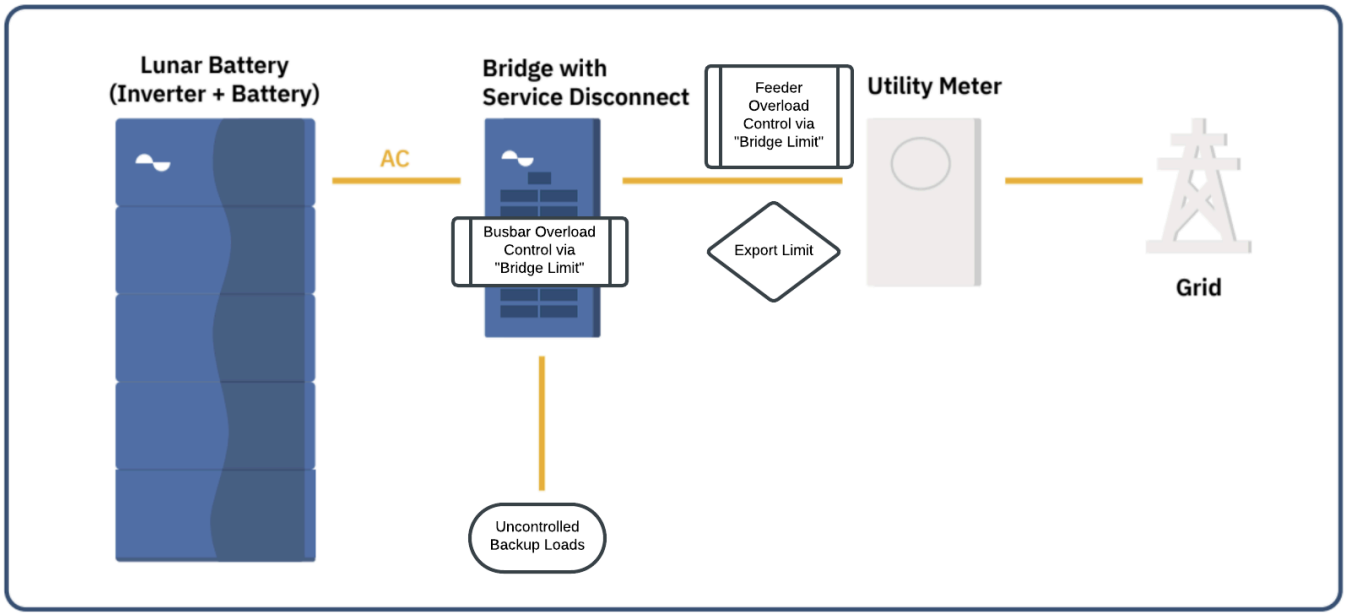

Whole Home: Lunar Battery with Meter Socket Adapter + Controller

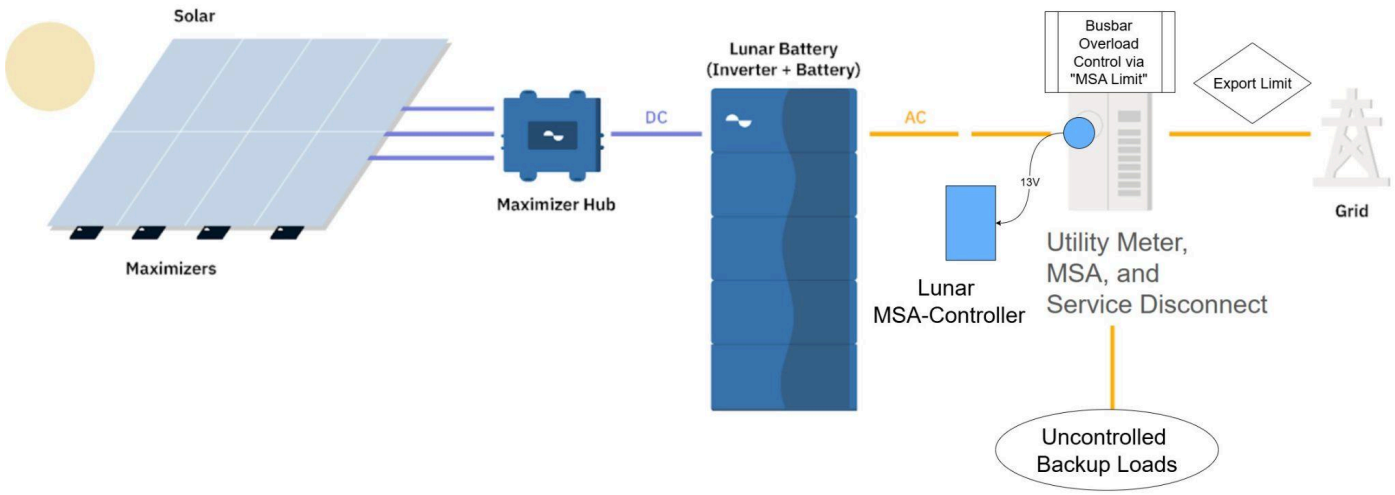

Details on above PCS diagrams:

	Max Limit	Controlled Conductor / Busbar	Current Sensors details
Bridge Limit (optional)	200A	Bridge busbar and feeder	Bridge CTs are factory installed
Panel Limit (optional)	400A	Coil metered busbar and feeder (typically the main panel)	Optional Rogowski Coil is field installed. Arrow points to load with A/B wiring. Arrow points to the grid with B/A wiring.
MSA Limit (optional)	200A	Main panel busbar and feeder	Meter Socket Adapter (MSA) CTs are factory installed
Export Limit (optional)	48kW	Limit is controlled at the Coil if Coils are installed. Limits are controlled at the Bridge if no Coils are installed.	Bridge CTs are factory installed. Optional Rogowski Coil is field installed. Arrow points to load with A/B wiring. Arrow points to the grid with B/A wiring.

The following are the distinct functions of the Lunar system. Each function is optional and can be used optionally with any other PCS function.

1. Lunar Bridge Busbar Limit (aka Busbar Overload Control)
    a. The **Lunar Battery AC current** will automatically curtail as needed based on the **Bridge Grid Current** to ensure the total current does not exceed the **User Set Limit** on the Bridge busbar.
    b. The maximum current that can be configured in the Installer App is 200A.

    ✔ NOTE: The Lunar Battery curtailment applies to all aspects of its operation, including PV output, battery discharge, and battery charging from the grid.

2. Lunar Rogowski Coils Busbar Limit (aka Busbar Overload Control)
    a. **Lunar Battery AC current** will curtail as needed based on the **Coil Grid Current** so as not to exceed the **User Set Limit** at the main panel busbar.
    b. The maximum current that can be configured in the Installer App is 400A.

> ✓ NOTE: The Lunar Battery curtailment applies to all aspects of its operation, including PV output, battery discharge, and battery charging from the grid.

3. MSA Limit
    a. The **Lunar Battery AC current** will automatically curtail as needed based on the **Main Panel Current** to ensure the total current does not exceed the **User Set Limit** on the Main Service Panel busbar.
    b. The maximum current that can be configured in the Installer App is 200A.

> ✓ NOTE: The Lunar Battery curtailment applies to all aspects of its operation, including PV output, battery discharge, and battery charging from the grid.

4. Grid Operating Mode
    a. The PCS CRD defines modes that set *battery* charge from grid and discharge to the grid allowances.
        i. **No Restriction**: The battery is allowed to both export to the grid and import from the grid without limitations.
        ii. **Export Only:** The battery is allowed to export to the grid but is restricted from importing power from the grid.
        iii. **Import Only**: The battery is restricted from exporting to the grid but is allowed to import power from the grid.
        iv. **No Exchange**: The battery is restricted from both exporting to the grid and importing from the grid.

> ✓ **NOTE**: The Lunar Battery can discharge to cover home loads in all modes.

> ✓ **NOTE**: The Lunar Battery can import power from the grid in all modes during abnormal maintenance or weather-related events.

> ✓ **NOTE**: None of these modes restrict PV export to the grid from the Lunar system.

> ✓ **NOTE**: All of these modes operate with or without an Export Limit.

5. Export Limit of the Lunar System
    a. **Lunar Battery AC power** will curtail as needed to meet the **User Set Limit** for export power.
    b. The export power limit is applied at the Rogowski Coil if the coils are installed. If the coils are not installed, the limit is applied at the Bridge CT.

c. The User Set Limit defines the allowable export limit for the Lunar system. An uncontrolled source may be metered; however, its export is not regulated. If the uncontrolled source is metered, the Lunar system can discharge to cover home loads, managing grid export specifically attributed to the Lunar system.
d. If the uncontrolled source is not metered, the Lunar system will curtail its output if total site export exceeds the user-set limit. Note that the system will not import power to reduce export and stay within the limit.
e. The maximum power that can be set in the Installer App is 50kW.

6. Import Limit of the Lunar System
    a. This feature is not accessible to users through the Installer App. Please contact Lunar if it is required for a specific site.
    b. For curtailment of battery charge from grid behavior to avoid tripping main breakers, see the Panel and Coil Limits, which provide this functionality.

7. The Lunar system can provide feeder conductor overload control for the following wires in the system:
    a. The grid supply feeder for the Bridge
        i. To control current on this feeder, set the "Bridge Limit" to the desired maximum current for the feeder. The Bridge Limit functionality is bi-directional and will curtail Lunar Battery AC output and input as needed to keep the current within the set limit.
    b. The grid supply feeder for the Coils
        i. To control current on this feeder, set the "Panel Limit" to the desired maximum current for the feeder. The Coil Limit functionality is bi-directional and will curtail Lunar Battery AC output and input as needed to maintain the current within the set limit.

A. Terminology

1. Lunar Battery AC (current or power) = PV or Battery AND charge or discharge (current or power as defined in the function).
2. Bridge grid current = Grid input or output current measured via the factory installed Bridge CTs.
3. Coil grid current = Grid input or output current measured via the field installed Rogowski Coils.
4. Main Panel current = Grid input or output current measured via the factory installed MSA CTs
5. User Set Limit = Installer input current or power limit within the PCS Menu of the Lunar Installer App during commissioning.

✓ NOTE: Current limits are for L1 or L2. Power limits are for L1+L2

B. Commissioning

PCS settings are set by the installer in the Lunar Installer App during commissioning. Access to the Lunar Installer App is protected behind login credentials. Home owners are not capable of altering PCS settings.

To remotely alter PCS settings for a site, contact Lunar.

PCS Settings with a Lunar Bridge Configuration:

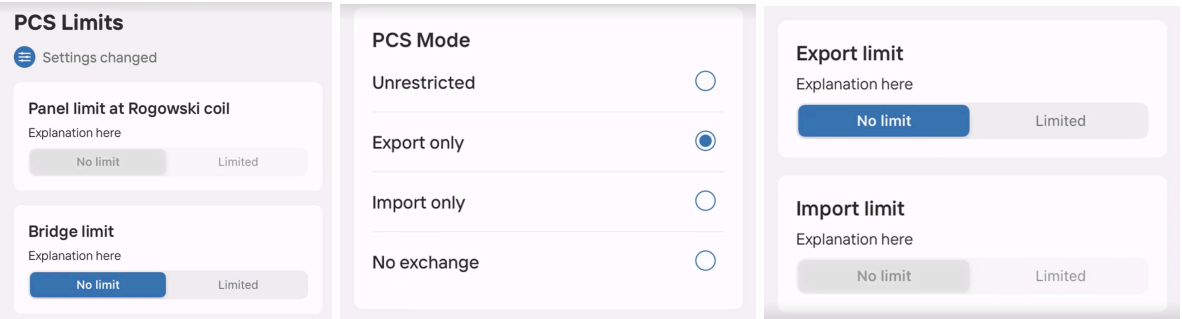

PCS Settings with a Meter Socket Adapter/Meter Socket Adapter Controller:

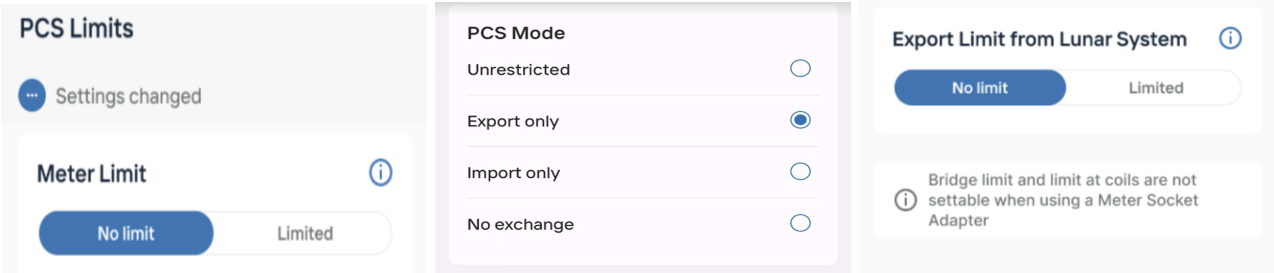

Labeling Requirements

Busbar Limit Labels

For Bridge Limit, a busbar limit label is factory applied on the Lunar Bridge dead front.

For Coil Limit, a busbar limit label shall be applied to the panelboard where the Rogowski Coils are installed. The Rogowski Coil Kit (90-06789A) is sold separately and contains two Rogowski Coils and the field applied labels.

For MSA Limit, a busbar limit label shall be applied to the panelboard where the MSA is installed. The MSA-Controller Coil (90-06700A) is sold separately and contains the field applied labels.

The installer must write in the respective **User Set Limit** for each label.

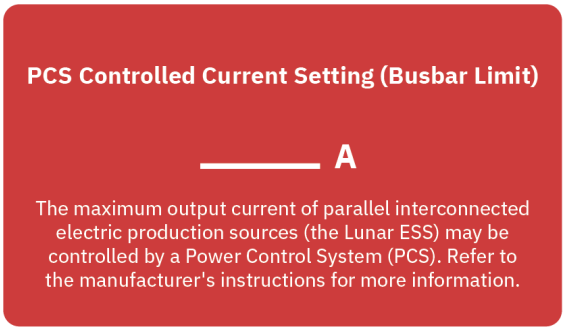

***Figure 1**. PCS Busbar Limit Label*

CT Labels

A CT label (Figure 2) is required where busbar limits are applied. For Bridge Limit, the CT label is factory applied inside the enclosure near the built-in Bridge CTs.
For Panel Limit at Rogowski Coils, the installer shall apply the CT label (included in the Lunar Hardware Kit) inside the panelboard near the location where Rogowski coils are installed.

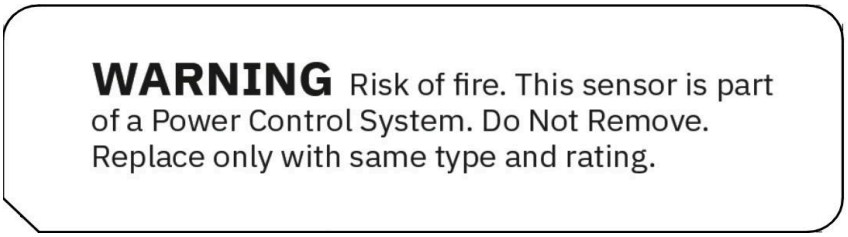

***Figure 3.** PCS CT Label*

Qualified Personnel

PCS settings can only be configured by qualified personnel in the Lunar Installer App during commissioning. Access to the Lunar Installer App is protected by login credentials. Homeowners or any unqualified personnel are not capable of altering PCS settings.

Bridge Limit

By setting a PCS Busbar Limit at the Lunar Bridge, Lunar Inverter AC current will curtail as needed such that current on the Bridge busbar does not exceed the user set limit. Note that battery charge, battery discharge, and PV output may curtail as needed to limit current on the busbar.

> ✓ **NOTE**: Busbar limits apply to current on either L1 or L2.

> ✓ **NOTE**: Bridge has built-in CTs. No additional Rogowskil Coils (CTs) are required.

Installer Action

- In the Installer App → PCS limits, set Bridge Limit to site specific required amperage.
- Installer applies both the busbar limit and the CT label at the main panel

(example with 100A Limit)

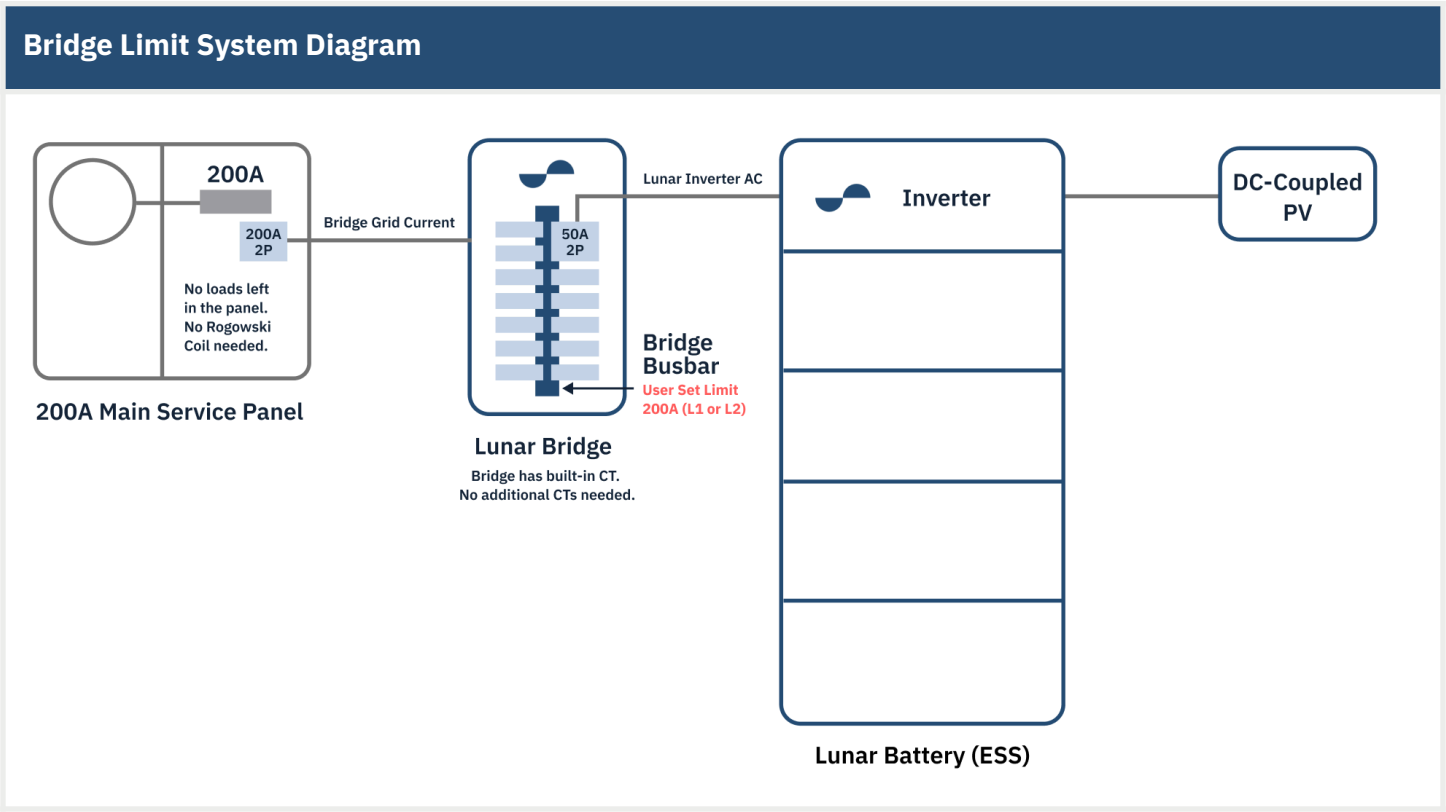

Panel Limit at Rogowski Coils

By setting a PCS Panel Limit at Rogowski Coils (CTs), Lunar Inverter AC current will curtail as needed such that current on the Coil (CT) measured busbar does not exceed the User Set Limit. Note that battery charge, battery discharge, and PV output may curtail as needed to limit current on the busbar. See Lunar Applications Note on Rogowski Coils for all Coil (CT) related requirements.

Installer Action:

- Install Rogowski Coils at the service disconnect .
- In the Installer App → PCS Limits, set Busbar Limit at Rogowski Coils to site specific required amperage .
- Installer applies both the busbar limit and the CT label at the main panel.

(example with 100A Limit)

Panel Limit at Rogowski Coil for 100A Home System Diagram

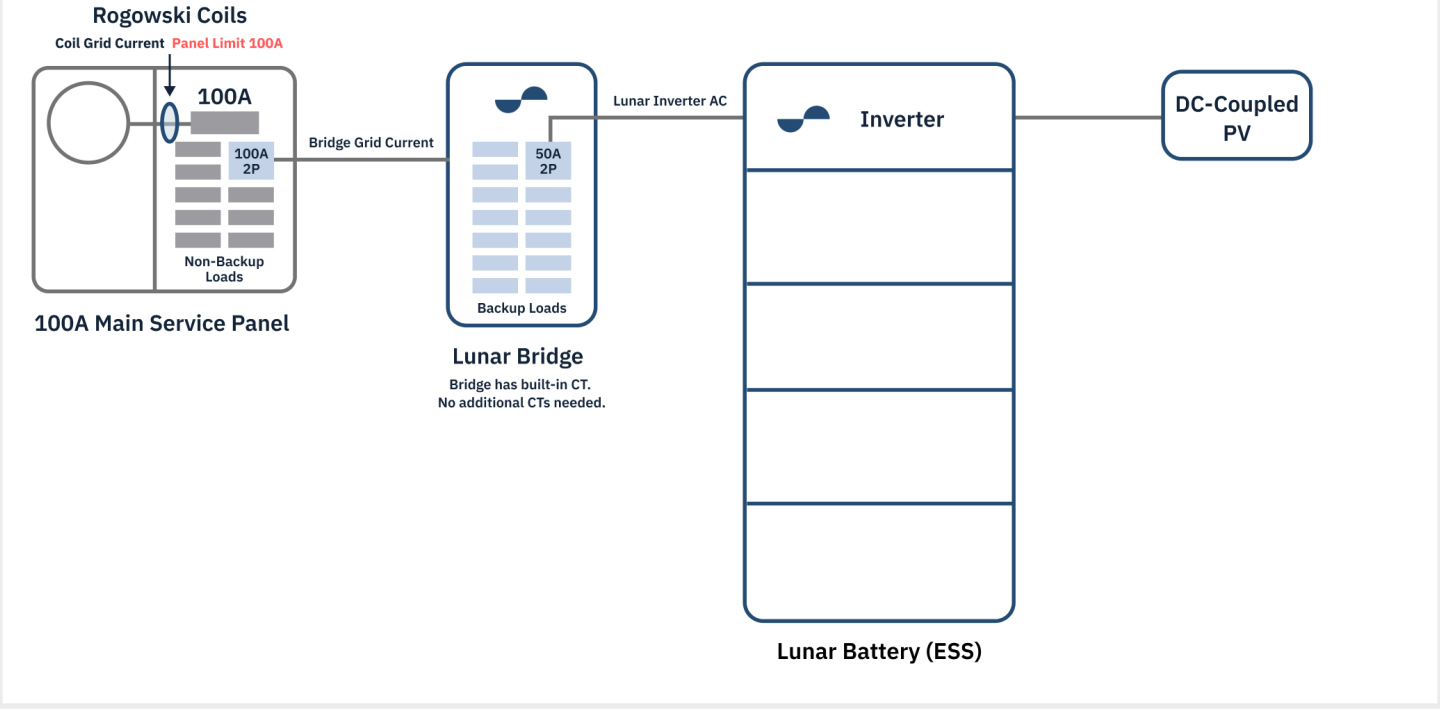

MSA Limit

By setting an MSA Limit, Lunar Inverter AC current will curtail as needed such that current on the Coil (CT) measured busbar does not exceed the User Set Limit. Note that battery charge, battery discharge, and PV output may curtail as needed to limit current on the busbar. See Lunar Meter Socket Adapter Controller Installation Manual for device related requirements.

Installer Action:

- Install MSA and MSA-Controller.
- In the Installer App → PCS Limits, set MSA Limit to site specific required amperage.
- Installer applies the busbar limit at the main panel.

Whole Home: Lunar Battery with Meter Socket Adapter + Controller

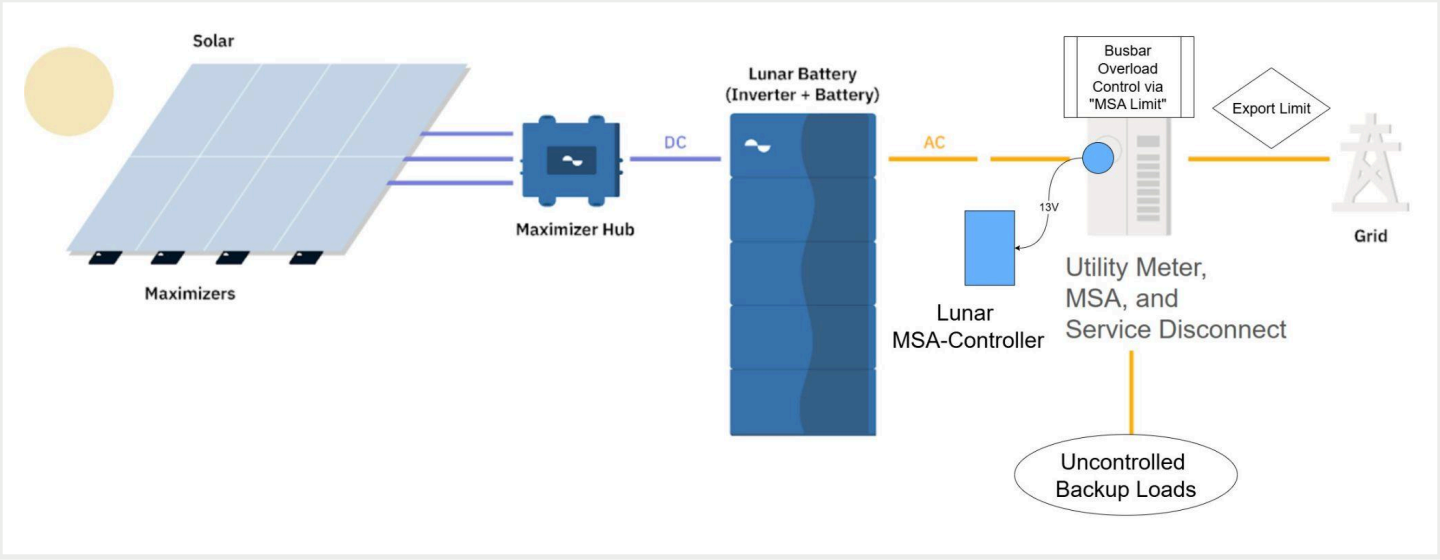

PCS Modes

The Lunar System is certified to the four ESS operating modes defined from the applicable standards. Each of these four modes determines battery import and battery export permissions.

PCS Modes*	Battery Export to Grid	Battery Import from Grid	PV Export to Grid
No Restriction	Yes	Yes	Yes

Export Only	Yes	No, only charge from PV**	Yes
Import Only	No, only discharge to offset site load	Yes	Yes
No Exchange	No, only discharge to offset site load	No, only charge from PV**	Yes

** The maximum open loop response time (OLRT) for grid operating modes are less than 2 seconds.*
*** For Export Only and No Exchange modes, the battery may temporarily charge from the grid for critical maintenance or ahead of extreme weather events.*

✓ **NOTE**: Installer is responsible for confirming that grid operating mode in the utility-approved NEM agreement matches the commissioned system. PCS Mode can be confirmed in the Installer App or in the Commissioning Report.

Installer Action

- Export Only mode is recommended for battery and PV installation so the battery can charge from PV during the day, and export to the grid when net metering export credits are most valuable. Homeowners can leverage Export Only mode to improve the payback on their system. To set up in the Installer App, go to PCS Limits → PCS Modes, select Export Only.
- Import Only mode is recommended for standalone battery installation (no AC and no DC PV) given there is no PV and the battery can only charge from the grid. To set up in the Installer App, go to PCS Limits → PCS Modes, select Import Only.

Export Limit from Lunar System

The Export Limit determines the maximum power the Lunar System can export from the site to the grid. Lunar Inverter AC output power (PV and battery) will be curtailed as needed to meet the User Set Limit. The Export Limit is applied at Rogowski Coils CTs if installed, at the Meter Socket Adapter CTs if installed, or at the Bridge CTs by default.

Note: Export power limit applies to L1 and L2 combined.

Note: Setting an Export Limit of 0 W may prevent Lunar from capturing VPP export credits.

Note: Lunar system does not import in order to try to be under the Export Limit.

Installer Action

- Export Limit may be set at the size of the remaining transformer capacity on site (10kW - 7.6kW = 2.4 kW), or conservatively at 0 Watt, based on utility interconnection guidance.
- The Export Limit protects the existing transformer from overloading, and avoids transformer upgrade.

(example with Coils)

Export Limit at Rogowski Coil System Diagram

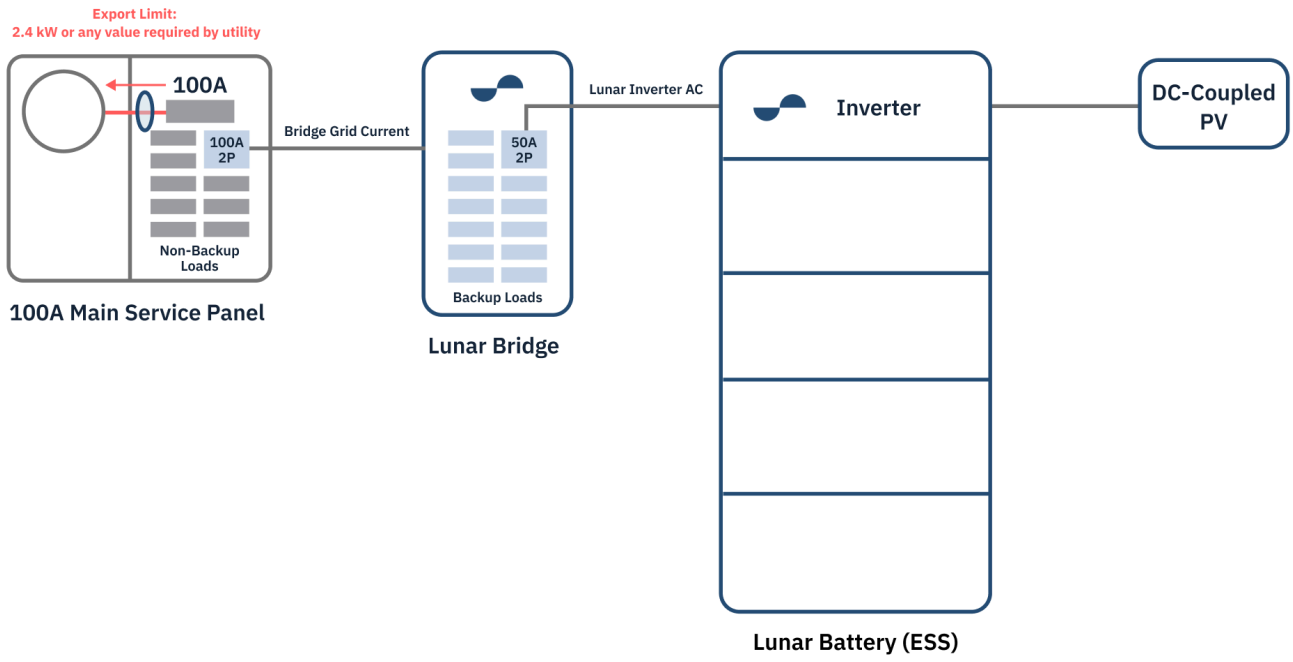

Apply PCS limits to AC-Coupled PV

Installers can apply PCS limits to ensure sites with AC-coupled PV to comply with NEC and utility interconnection requirements. The Lunar system will curtail Inverter AC power output if site export and/or the current at the Export Limit Location exceeds the User Set Limit.

Option 1: AC PV not in backup

Note: AC-coupled PV does not back up the home during outage.

Note: AC-coupled PV cannot be directly metered by Lunar.

Installer Action

- Install Rogowski Coils and apply labels at the main panel.
- Ensure AC PV is excluded from backup.
- AC-coupled PV is an uncontrolled source. When selecting the PCS panel limit, the installer must assume the uncontrolled power source is outputting at its maximum current (16A). In the Installer App → PCS limits, set Panel Limit at Rogowski Coils to 84A. (100A - 16A = 84A).

Busbar Limit at Rogowski Coil for AC-coupled PV System Diagram

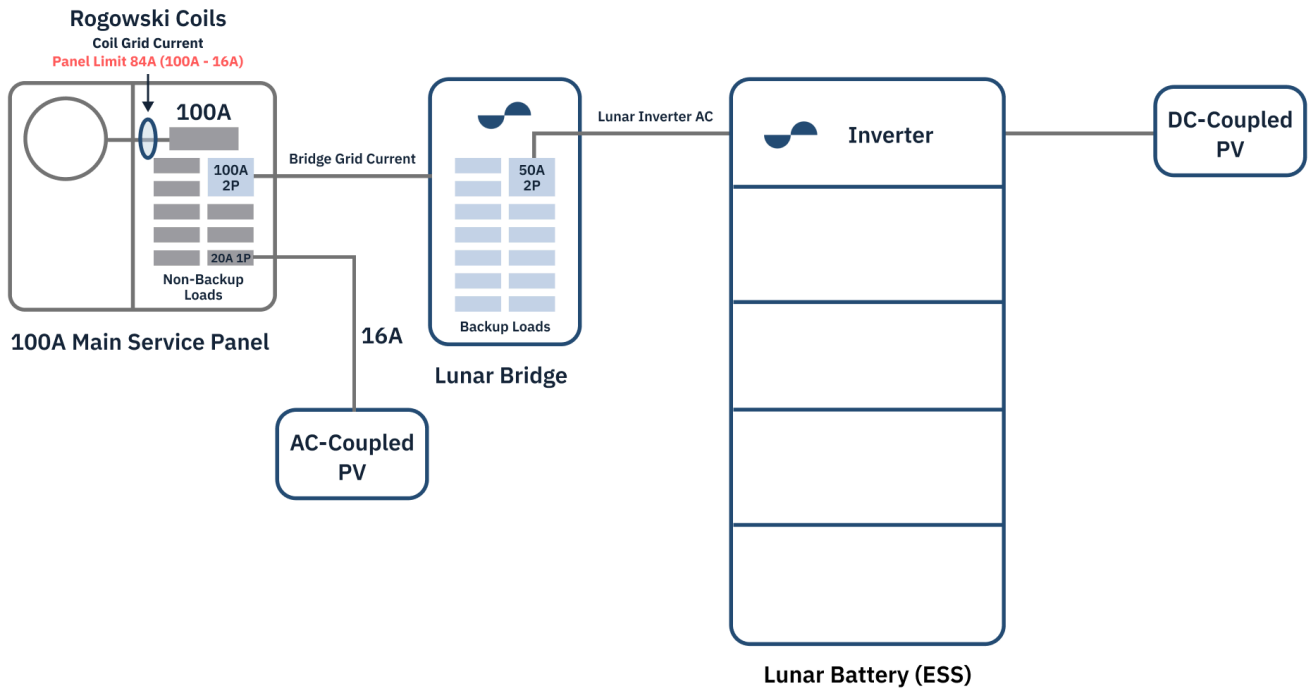

Option 2: AC PV in backup

Note: AC-coupled PV must have use an Eaton AbleEdge Breaker commissioned with the Lunar system.

Note: AC-coupled PV and Eaton AbleEdge Breakers are an uncontrolled source and not a functional component of the Lunar PCS system.

Installer Action

- Install Rogowski Coils and apply labels at the main panel.
- Ensure AC PV is excluded from backup.
- AC-coupled PV is an uncontrolled source. When selecting the PCS panel limit, the installer must assume the uncontrolled power source is outputting at its maximum current (16A). In the Installer App → PCS limits, set Bridge Limit 84A. (100A - 16A = 84A).

Busbar Limit at Bridge for AC-coupled PV System Diagram

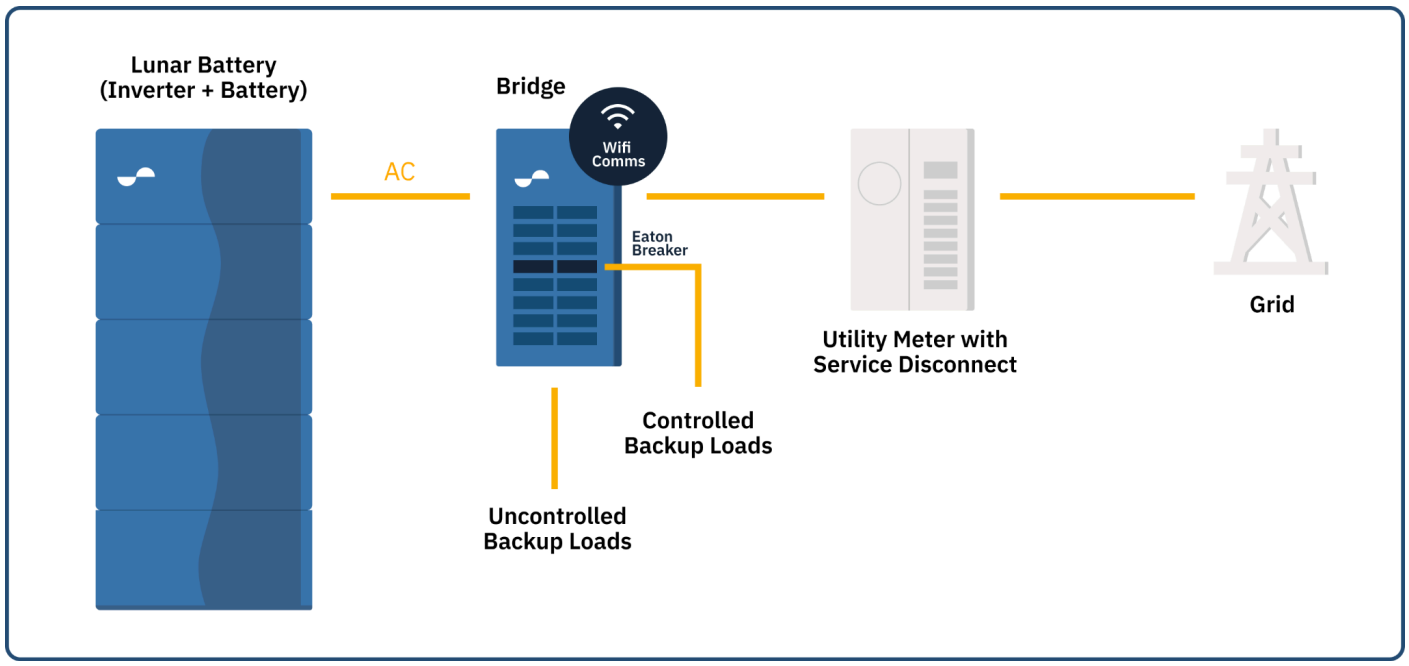

Grid Interconnection Settings for the Lunar Inverter

The following settings are factory configured by Lunar Energy.

Modifications to the settings listed in this section can only be made by a Lunar Energy qualified engineer. Contact Lunar Support for questions.

Curtailment to Inverter real power output as well as site export, may be modified by the Lunar Install App or the Lunar Gridshare platform.

Default Settings:

Enter Service Defaults	
High Voltage Threshold (% Nominal)	105
Low Voltage Threshold (% Nominal)	91.7
High Frequency Threshold (Hz)	60.1
Low Frequency Threshold (Hz)	59.5
Delay (S)	15
Random Delay (S)	N/A
Ramp Time (S)	50

High Voltage Shall Trip Curve	
Points	3
Open Loop Time (S)	0

Points	
Voltage (% Nominal)	**Time(S)**
120	0.16
120	13
110	13

Low Voltage Shall Trip Curve	
Points	3
Open Loop Time (S)	0

Points	
Voltage (% Nominal)	**Time(S)**
50	2
50	21
88	21

High Frequency Shall Trip Curve	
Points	3
Open Loop Time (S)	0

Points	
Frequency (Hz)	**Time(S)**
62	0.16
62	300
61.2	300

Low Frequency Shall Trip Curve	
Points	3
Open Loop Time (S)	0

Points	
Frequency (Hz)	**Time(S)**
56.5	0.16
56.5	300
58.5	300

Volt Var Curve	
Status	enabled
Points	4
Open Loop Time (S)	5

Points	
Voltage (% Nominal)	**Reactive Power (% Max Var)**
92	30
97	0
103	0
107	-30

Frequency Droop	
Response Time (S)	5
Dead-band Over Frequency	0.16
Dead-band Under Frequency	56.5
Coefficient Over Frequency	300
Coefficient Under Frequency	56.5

Volt Watt Curve	
Points	2
Open Loop Time (S)	5

Points	
Voltage (% Nominal)	**Power (% Nominal)**
106	100
110	0